FULLY OVERLAPPED ROLLED HOLLOW SECTION WELDED JOINTS IN TRUSSES

Thesis submitted to the University of Nottingham
for the degree of Doctor of Philosophy

by

ANTONY PHILIASTIDES, B.Sc

Department of Civil Engineering
University of Nottingham
May 1988

VOLUME II

CONTENTS

APPENDIX A

TRUSS FABRICATION DRAWINGS

Item	Title	Page No.
Figures		
A1	Truss T1 : General layout.	205
A2	Truss T2 : General layout.	206
A3	Truss T2/2 : General layout.	207
A4	Truss T3 : General layout.	208
A5	Truss T4 : General layout.	209
A6	Truss T5 : General layout.	210
A7	Truss T6 : General layout.	211
A8	Trusses T1 & T2 : Joint details.	212
A9	Trusses T3 & T4 : Joint details.	213
A10	Trusses T5 : Joint details.	214
A11	Trusses T6 : Joint details.	215
A12	Truss support details.	216
A13	Weld details.	217

APPENDIX B

TRUSS MEMBER PROPERTIES AND JOINT PARAMETERS

Tables		
B1	Measured section and material properties for truss T1.	219
B2	Measured section and material properties for truss T2.	220
B3	Measured section and material properties for truss T2/2.	221
B4	Measured section and material properties for truss T3.	222
B5	Measured section and material properties for truss T4.	223
B6	Measured section and material properties for truss T5.	224
B7	Measured section and material properties for truss T6.	225
B8	Joint properties for truss T1.	226
B9	Joint properties for truss T2.	227
B10	Joint properties for truss T3.	228
B11	Joint properties for truss T4.	229
B12	Joint properties for truss T5.	230
B13	Joint properties for truss T6.	231
B14	Centre joint properties for trusses T1, T2, T3, T4, & T6.	232
B15	Centre joint properties for truss T5.	233
B16	Centre joint properties for truss T5.	234
B17	Corner joint properties for trusses T1, T2, &T5.	235
B18	Corner joint properties for trusses T3, T4, T6.	236

Item	Title	Page No.
B19	Joint parameters for truss T1.	237
B20	Joint parameters for truss T2.	238
B21	Joint parameters for truss T3.	239
B22	Joint parameters for truss T4.	240
B23	Joint parameters for truss T5.	241
B24	Joint parameters for truss T6.	242
B25	Corner joint parameters for trusses T1, T2 & T5.	243
B26	Corner joint parameters for trusses T3, T4 & T6.	244

APPENDIX C

STRAIN GAUGE POSITIONS

Tables

C1	Strain gauge positions for truss T1.	246
C2	Strain gauge positions for truss T2.	246
C3	Strain gauge positions for truss T3.	246
C4	Strain gauge positions for truss T4.	247
C5	Strain gauge positions for truss T5.	247
C6	Strain gauge positions for truss T6.	247

Figures

C1	Truss T1 : Strain gauge positions.	248
C2	Truss T2 : Strain gauge positions.	249
C3	Trusses T3, T4, & T6 : Strain gauge positions.	250
C4	Truss T5 : Strain gauge positions.	251

APPENDIX D

JOINT ULTIMATE STRENGTHS AND FAILURE MODES

Tables

D1	Measured joint axial forces and observed failure modes, at ram failure load for truss T1.	253
D2	Measured joint axial forces and observed failure modes, at ram failure load for truss T1. (considering all load cycles)	254
D3	Measured joint axial forces and observed failure modes, at ram failure load for truss T2.	255
D4	Measured joint axial forces and observed failure modes, at ram failure load for truss T2/2.	256
D5	Measured joint axial forces and observed failure modes, at ram failure load for truss T3.	257
D6	Measured joint axial forces and observed failure modes, at ram failure load for truss T4.	258
D7	Measured joint axial forces and observed failure modes, at ram failure load for truss T5.	259
D8	Measured joint axial forces and observed failure modes, at ram failure load for truss T6.	260
D9	Centre joints : measured axial forces and observed failure modes, at ram failure load for trusses T1, T2, T2/2, T3, T4 & T6.	261
D10	Centre joints : measured axial forces and observed failure modes, at ram failure load for truss T5.	262

Item	Title	Page No.
D11	Corner joints : measured axial forces and observed failure modes, at ram failure load for trusses T1, T2, T2/2, & T5.	263
D12	Corner joints : measured axial forces and observed failure modes, at ram failure load for trusses T3, T4, & T6.	264

APPENDIX E

STRESS DISTRIBUTION DIAGRAMS FOR TRUSS JOINTS

Figure		
E1(a)	Truss T1 : Stress distribution at strain gauge positions in the elastic range & at ultimate load (compression chord joints).	266
E1(b)	Truss T1 : Stress distribution at strain gauge positions in the elastic range & at ultimate load (tension chord joints).	267
E2(a)	Truss T2 : Stress distribution at strain gauge positions in the elastic range & at ultimate load (compression chord joints).	268
E2(b)	Truss T2 : Stress distribution at strain gauge positions in the elastic range & at ultimate load (tension chord joints).	269
E3(a)	Truss T2/2 : Stress distribution at strain gauge positions in the elastic range & at ultimate load (compression chord joints).	270
E3(b)	Truss T2/2 : Stress distribution at strain gauge positions in the elastic range & at ultimate load (tension chord joints).	271
E4(a)	Truss T3 : Stress distribution at strain gauge positions in the elastic range & at ultimate load (compression chord joints).	272
E4(b)	Truss T3 : Stress distribution at strain gauge positions in the elastic range & at ultimate load (tension chord joints).	273
E5(a)	Truss T4 : Stress distribution at strain gauge positions in the elastic range & at ultimate load (compression chord joints).	274
E5(b)	Truss T4 : Stress distribution at strain gauge positions in the elastic range & at ultimate load (tension chord joints).	275
E6(a)	Truss T5 : Stress distribution at strain gauge positions in the elastic range & at ultimate load (compression chord joints).	276
E6(b)	Truss T5 : Stress distribution at strain gauge positions in the elastic range & at ultimate load (tension chord joints).	277
E7(a)	Truss T6 : Stress distribution at strain gauge positions in the elastic range & at ultimate load (compression chord joints).	278
E7(b)	Truss T6 : Stress distribution at strain gauge positions in the elastic range & at ultimate load (tension chord joints).	279

Item Title Page No.

APPENDIX F

EXPERIMENTAL AND THEORETICAL TRUSS AXIAL FORCES AND BENDING MOMENTS

Tables

F1	Experimental and theoretical elastic axial force co-efficients for truss T1.	281
F2	Experimental and theoretical elastic axial force co-efficients for truss T2.	282
F3	Experimental and theoretical elastic axial force co-efficients for truss T3.	283
F4	Experimental and theoretical elastic axial force co-efficients for truss T4.	284
F5	Experimental and theoretical elastic axial force co-efficients for truss T5.	285
F6	Experimental and theoretical elastic axial force co-efficients for truss T6.	286
F7	Comparison of experimental and theoretical elastic axial forces for truss T1.	287
F8	Comparison of experimental and theoretical elastic axial forces for truss T2.	288
F9	Comparison of experimental and theoretical elastic axial forces for truss T3.	289
F10	Comparison of experimental and theoretical elastic axial forces for truss T4.	290
F11	Comparison of experimental and theoretical elastic axial forces for truss T5.	291
F12	Comparison of experimental and theoretical elastic axial forces for truss T6.	292
F13	Experimental and theoretical elastic bending moment co-efficients for truss T1.	293
F14	Experimental and theoretical elastic bending moment co-efficients for truss T2.	294
F15	Experimental and theoretical elastic bending moment co-efficients for truss T3.	295
F16	Experimental and theoretical elastic bending moment co-efficients for truss T4.	296
F17	Experimental and theoretical elastic bending moment co-efficients for truss T5.	297
F18	Experimental and theoretical elastic bending moment co-efficients for truss T6.	298
F19	Measured axial forces and bending moments at ram failure load for trusses T1 & T2.	299
F20	Measured axial forces and bending moments at ram failure load for trusses T3 & T4.	300
F21	Measured axial forces and bending moments at ram failure load for trusses T5 & T6.	301

APPENDIX G

EXPERIMENTAL AND THEORETICAL ELASTIC BENDING MOMENT DISTRIBUTION DIAGRAMS

Figures

G1(a)	Truss T1 : Comparison of experimental and theoretical (model GS) elastic bending moment distributions.	303
G1(b)	Truss T1 : Comparison of experimental and theoretical (model GK) elastic bending moment distributions.	304
G2(a)	Truss T2 : Comparison of experimental and theoretical (model S1) elastic bending moment distributions.	305
G2(b)	Truss T2 : Comparison of experimental and theoretical (model S2) elastic bending moment distributions.	306
G2(c)	Truss T2 : Comparison of experimental and theoretical (model Y) elastic bending moment distributions.	307
G2(d)	Truss T2 : Comparison of experimental and theoretical (model K) elastic bending moment distributions.	308

Item	Title	Page No.
G3(a)	Truss T3 : Comparison of experimental and theoretical (model S1) elastic bending moment distributions.	309
G3(b)	Truss T3 : Comparison of experimental and theoretical (model S2) elastic bending moment distributions.	310
G3(c)	Truss T3 : Comparison of experimental and theoretical (model Y) elastic bending moment distributions.	311
G3(d)	Truss T3 : Comparison of experimental and theoretical (model K) elastic bending moment distributions.	312
G4(a)	Truss T4 : Comparison of experimental and theoretical (model S1) elastic bending moment distributions.	313
G4(b)	Truss T4 : Comparison of experimental and theoretical (model S2) elastic bending moment distributions.	314
G4(c)	Truss T4 : Comparison of experimental and theoretical (model Y) elastic bending moment distributions.	315
G4(d)	Truss T4 : Comparison of experimental and theoretical (model K) elastic bending moment distributions.	316
G5(a)	Truss T5 : Comparison of experimental and theoretical (model S1) elastic bending moment distributions.	317
G5(b)	Truss T5 : Comparison of experimental and theoretical (model S2) elastic bending moment distributions.	318
G5(c)	Truss T5 : Comparison of experimental and theoretical (model Y) elastic bending moment distributions.	319
G5(d)	Truss T5 : Comparison of experimental and theoretical (model K) elastic bending moment distributions.	320
G6(a)	Truss T6 : Comparison of experimental and theoretical (model S1) elastic bending moment distributions.	321
G6(b)	Truss T6 : Comparison of experimental and theoretical (model S2) elastic bending moment distributions.	322
G6(c)	Truss T6 : Comparison of experimental and theoretical (model Y) elastic bending moment distributions.	323
G6(d)	Truss T6 : Comparison of experimental and theoretical (model K) elastic bending moment distributions.	324

APPENDIX H

EXPERIMENTAL BENDING MOMENT DISTRIBUTION DIAGRAMS AT TRUSS ULTIMATE LOAD

Figures

H1	Truss T1 : Comparison of measured bending moment distribution at ultimate load with the experimental elastic distribution extrapolated to the ultimate load.	326
H2	Truss T2 : Comparison of measured bending moment distribution at ultimate load with the experimental elastic distribution extrapolated to the ultimate load.	327
H3	Truss T3 : Comparison of measured bending moment distribution at ultimate load with the experimental elastic distribution extrapolated to the ultimate load.	328

Item	Title	Page No.
H4	Truss T4 : Comparison of measured bending moment distribution at ultimate load with the experimental elastic distribution extrapolated to the ultimate load.	329
H5	Truss T5 : Comparison of measured bending moment distribution at ultimate load with the experimental elastic distribution extrapolated to the ultimate load.	330
H6	Truss T6 : Comparison of measured bending moment distribution at ultimate load with the experimental elastic distribution extrapolated to the ultimate load.	331

APPENDIX I

CIDECT DESIGN EQUATIONS FOR RHS GAP AND OVERLAP JOINTS

Tables

I1	CIDECT implementation of RHS gap joint strength equations.	333
I2	CIDECT implementation of RHS overlap joint strength equations.	334

APPENDIX J

COMPARISON OF EXPERIMENTAL AND PREDICTED JOINT STRENGTHS

Tables

J1	Comparison of measured branch member forces at ram failure load with the predicted mean ultimate joint strengths (truss T2).	336
J2	Comparison of measured branch member forces at ram failure load with the predicted mean ultimate joint strengths (truss T2/2).	337
J3	Comparison of measured branch member forces at ram failure load with the predicted mean ultimate joint strengths (truss T3).	338
J4	Comparison of measured branch member forces at ram failure load with the predicted mean ultimate joint strengths (truss T4).	339
J5	Comparison of measured branch member forces at ram failure load with the predicted mean ultimate joint strengths (truss T5).	340
J6	Comparison of measured branch member forces at ram failure load with the predicted mean ultimate joint strengths (truss T6).	341

APPENDIX K

BRANCH MEMBERS : COMPARISON OF EXPERIMENTAL AND DESIGN RAM FAILURE LOADS

Tables

K1	Comparison of experimental and predicted ram failure loads based on branch member failure (truss T2).	343
K2	Comparison of experimental and predicted ram failure loads based on branch member failure (truss T3).	344
K3	Comparison of experimental and predicted ram failure loads based on branch member failure (truss T4).	345
K4	Comparison of experimental and predicted ram failure loads based on branch member failure (truss T5).	346

Item	Title	Page No.
K5	Comparison of experimental and predicted ram failure loads based on branch member failure (truss T6).	347

APPENDIX L

CHORD MEMBERS : COMPARISON OF EXPERIMENTAL AND DESIGN RAM FAILURE LOADS

Tables

L1	Comparison of experimental ram failure load with the predicted ram failure loads based on chord member failure (truss T2).	349
L2	Comparison of experimental ram failure load with the predicted ram failure loads based on chord member failure (truss T3).	350
L3	Comparison of experimental ram failure load with the predicted ram failure loads based on chord member failure (truss T4).	351
L4	Comparison of experimental ram failure load with the predicted ram failure loads based on chord member failure (truss T5).	352
L5	Comparison of experimental ram failure load with the predicted ram failure loads based on chord member failure (truss T6).	353

APPENDIX M

COMPARISON OF MEASURED AND ALLOWABLE SHEAR STRESS IN THE BRANCH MEMBERS

Tables

M1	Comparison of experimental and allowable shear stress in branch member sidewalls at ram failure load (truss T2).	355
M2	Comparison of experimental and allowable shear stress in branch member sidewalls at ram failure load (truss T3).	356
M3	Comparison of experimental and allowable shear stress in branch member sidewalls at ram failure load (truss T4).	357
M4	Comparison of experimental and allowable shear stress in branch member sidewalls at ram failure load (truss T5).	358
M5	Comparison of experimental and allowable shear stress in branch member sidewalls at ram failure load (truss T6).	359

Figures

M1	The transfer of shear force between the branch members and the connecting chord face.	360
M2	Allowable shear stress based on the Von Mises stress field.	361

APPENDIX A

TRUSS FABRICATION DRAWINGS

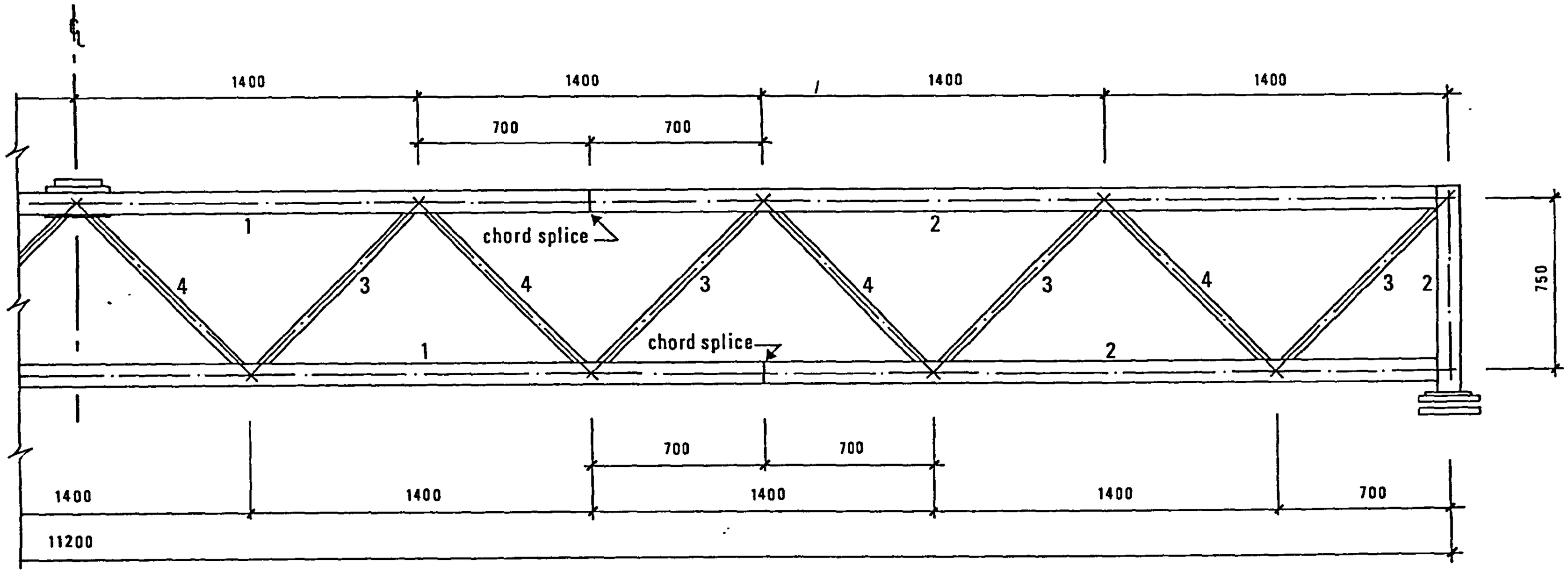

General Notes

1 all steelwork grade 43C

2 all welds grade 50C

3 all fillet welds 5mm

4 all butt welds full penetration

5 all dimensions in mm

Detail References

1 for weld details see fig A 13

2 for joint details see fig A 8

3 for support details see fig A 12

Nominal Section Sizes

chords :	1 - 100 x 100 x 5 RHS	central
	2 - 100 x 100 x 4 RHS	outer
bracings :	3 - 40x40x3·2 RHS	ties
	4 - 40x40x4 RHS	struts
end posts:	2 - 100 x 100 x 4 RHS	

Fig A1 Truss T1 : General layout.

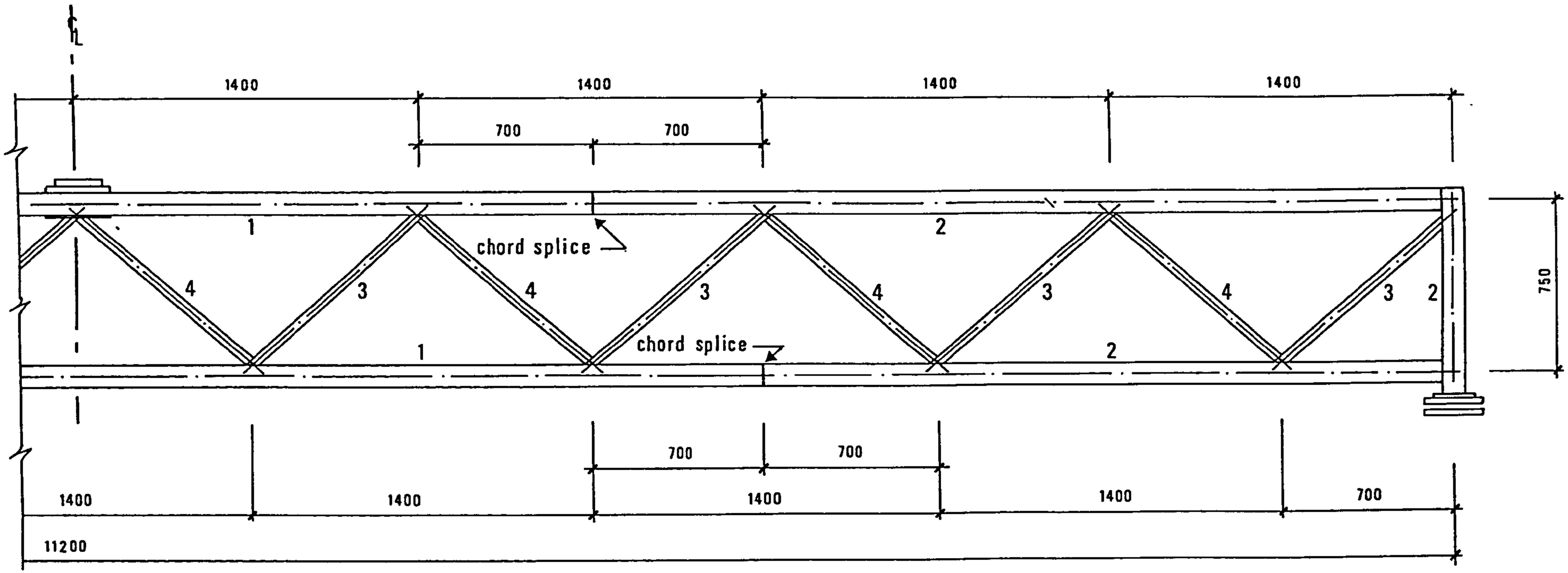

General Notes

as for truss T1 : see fig A1

on one side of ℄ strut overlaps tie with tie overlapping strut on the opposite side

Detail References

as for truss T1 : see fig A1

Nominal Section Sizes

as for truss T1 : see fig A1

Fig A2 Truss T2 : General layout.

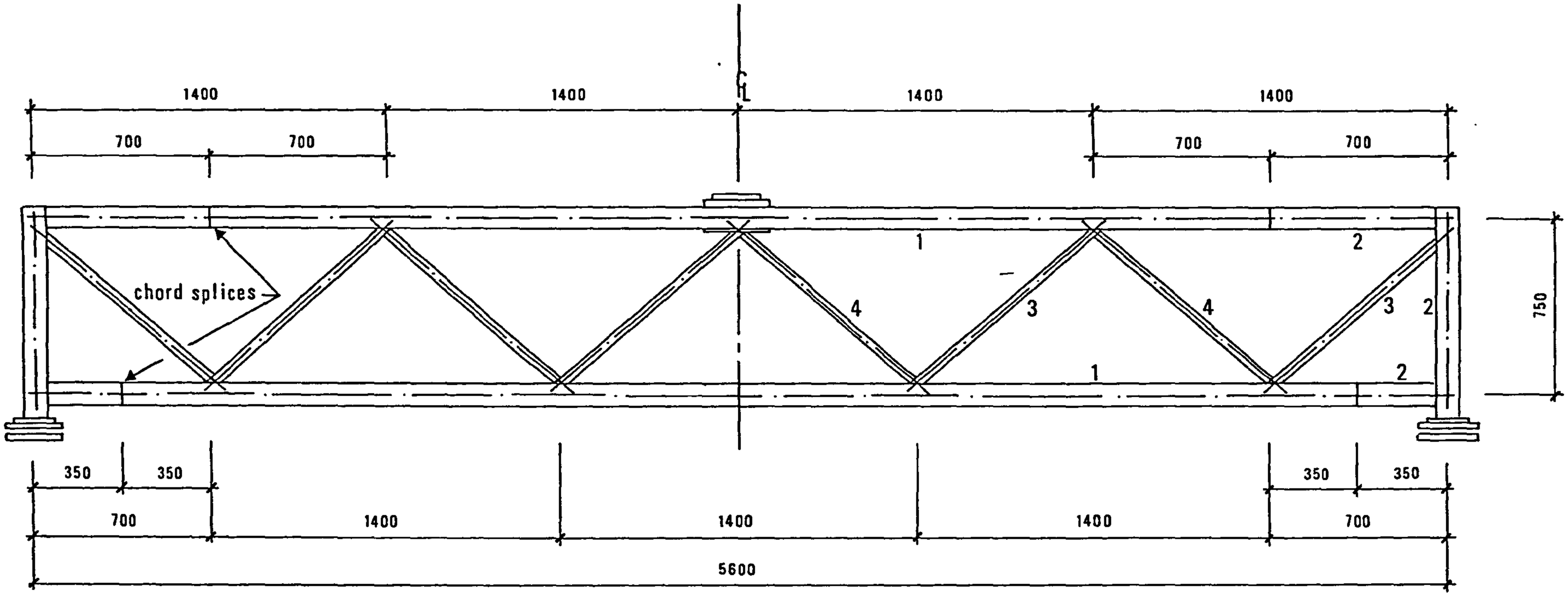

General Notes

as for truss T1 : see fig A1

on one side of ℄ strut overlaps tie with tie overlapping strut on the opposite side

Detail References

as for truss T1 : see fig A1

Nominal Section Sizes

as for truss T1 : see fig A1

Fig A3 Truss T2/2 : General layout.

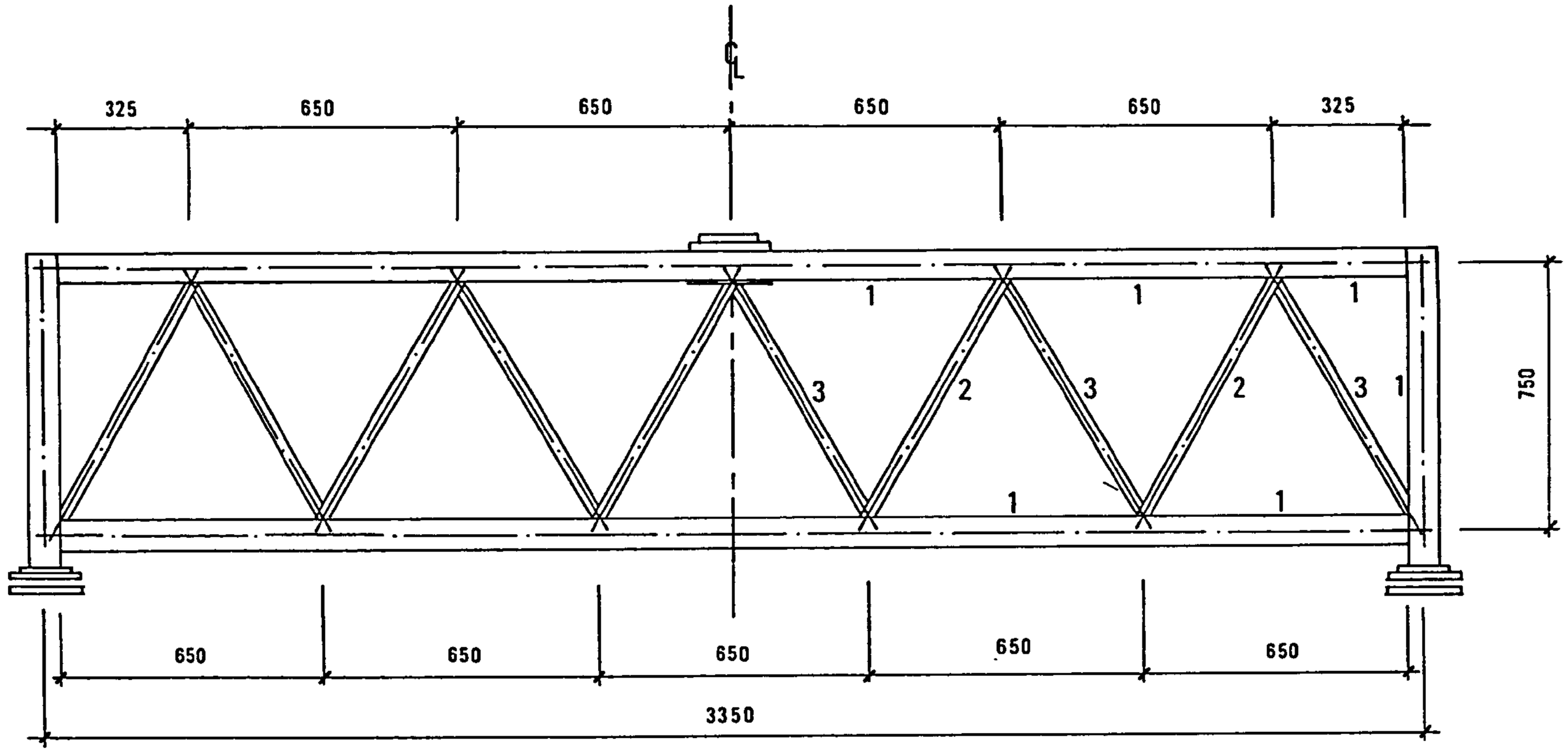

General Notes

as for truss T1 : see fig A 1

on one side of ℄ strut overlaps tie with tie overlapping strut on the opposite side

Detail References

1 for weld details see fig A 13

2 for joint details see fig A 9

3 for support details see fig A 12

Nominal Section Sizes

chords :	1 - 100 x 100 x 5	RHS	
bracings :	2 - 40 x 40 x 3·2	RHS	ties
	3 - 40 x 40 x 4	RHS	struts
end posts :	1 - 100 x 100 x 5	RHS	

Fig A4 Truss T3 : General layout.

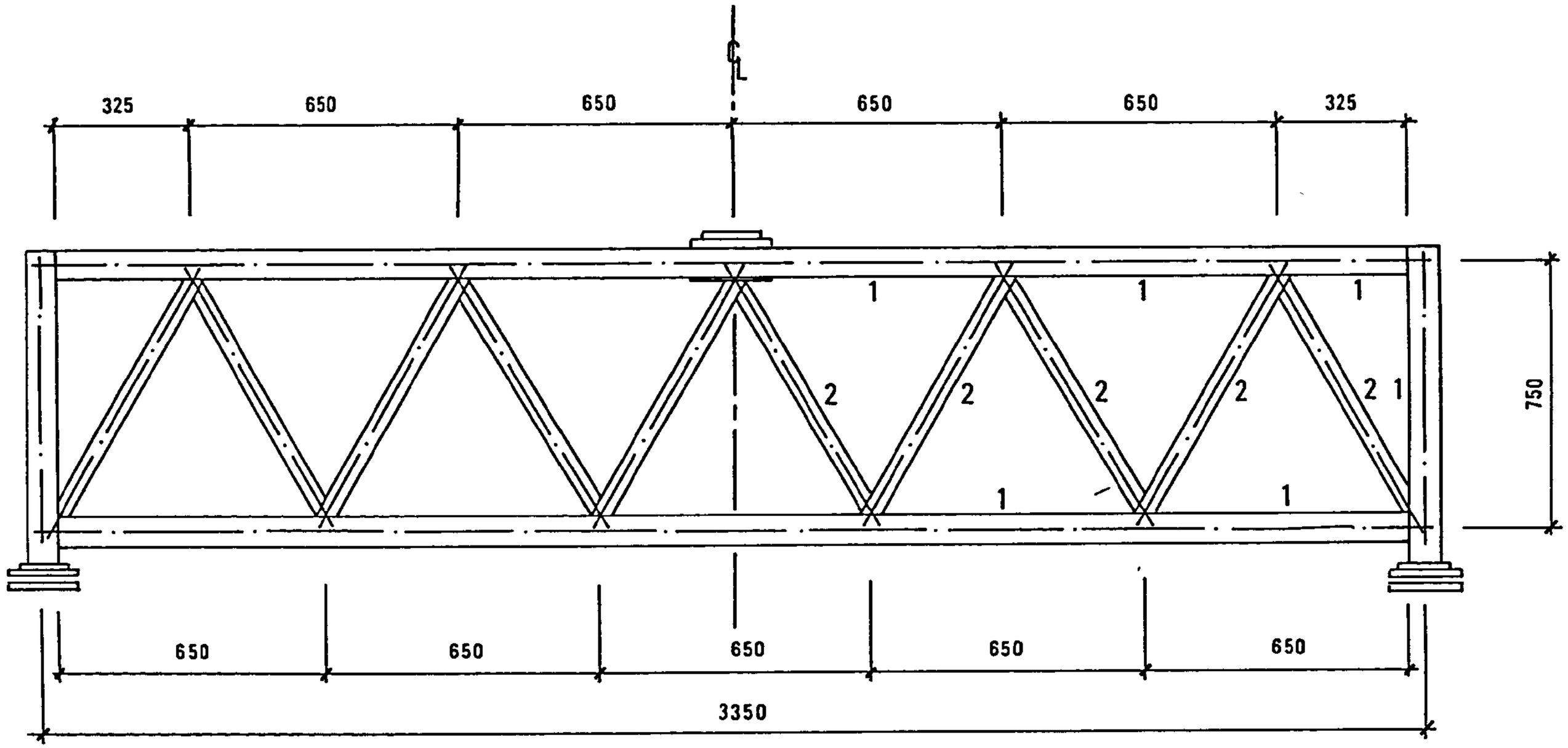

General Notes

as for truss T1 : see fig A 1

on one side of ℄ strut overlaps tie with tie overlapping strut on the opposite side

Detail References

as for truss T3 : see fig A 4

Nominal Section Sizes

chords : 1-100 x 100 x 5 RHS

bracings : 2-60x60x3·2 RHS

end posts : 1-100 x 100 x 5 RHS

Fig A5 Truss T4 : General layout.

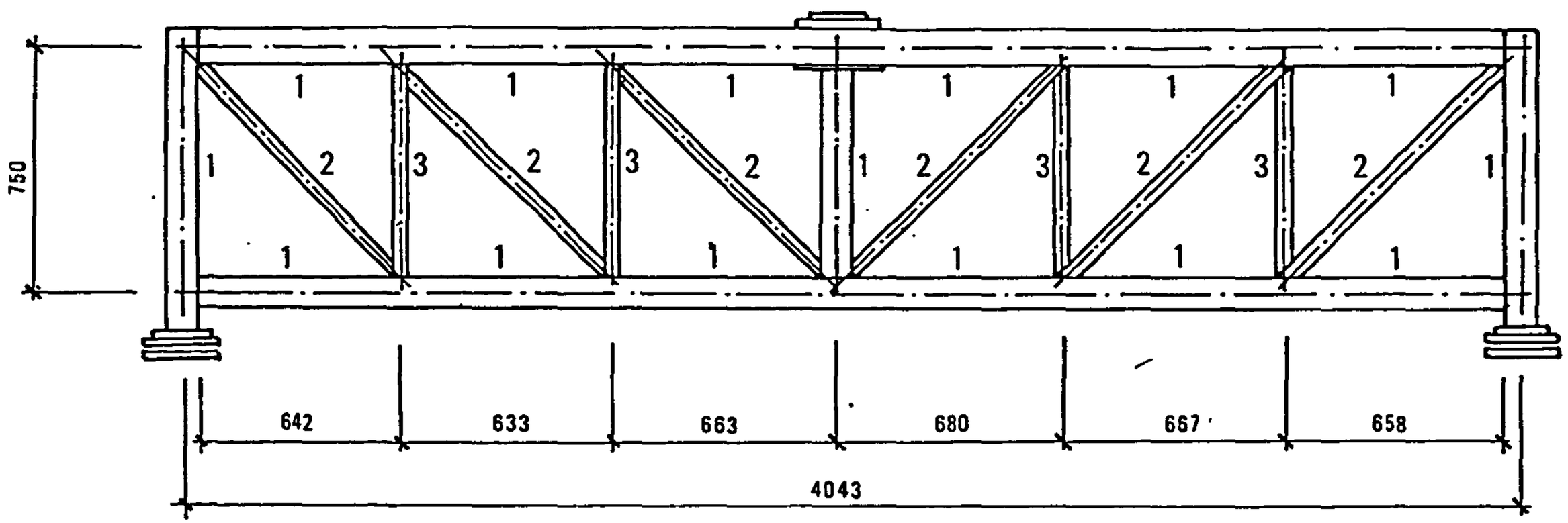

General Notes

as for truss T1 : see fig A 1

on one side of girder strut overlaps tie, with tie overlapping strut on the opposite side

Detail References

1 for weld details see fig A 13

2 for joint details see fig A 10

3 for support details see fig A 12

Nominal Section Sizes

chords	:	1-100 x 100x5	RHS	
bracings	:	2-40x40x3	RHS	ties
		3-40 x40x4	RHS	struts
posts	:	1-100x 100x5	RHS	central & ends

Fig A6 Truss T5 : General layout.

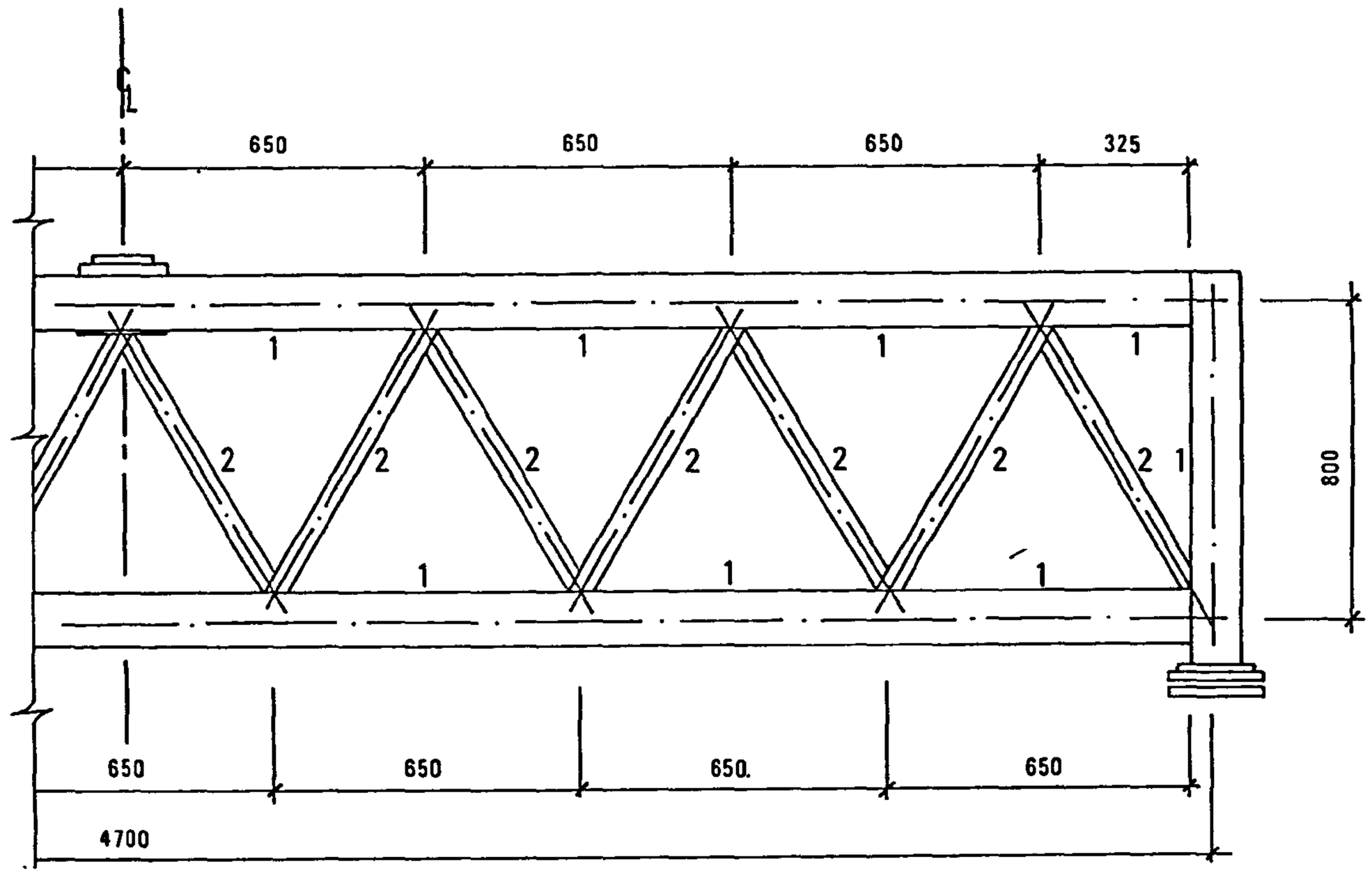

General Notes

as for truss T1 : see fig A 1

on one side of ℄ strut overlaps tie with tie overlapping strut on the opposite side

Detail References

1 for weld details see fig A 13

2 for joint details see fig A 11

3 for support details see fig A 12

Nominal Section Sizes

chords : 1-150x150x6·3 RHS

bracings : 2-60x60x3·2 RHS

end posts : 1-150x 150x 6·3 RHS

Fig A7 Truss T6 : General layout.

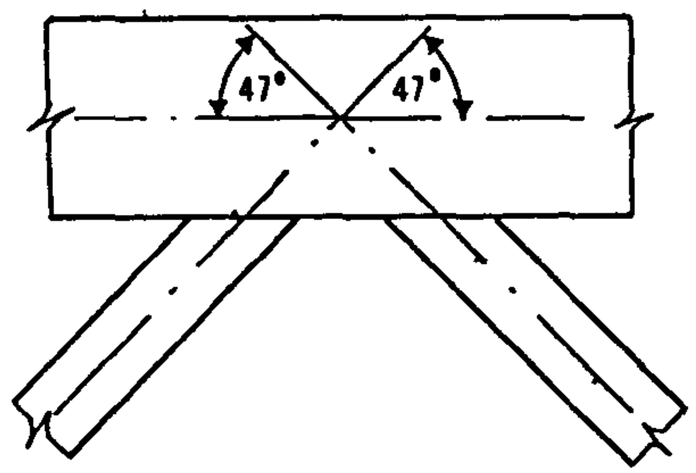

T1 : typical joint

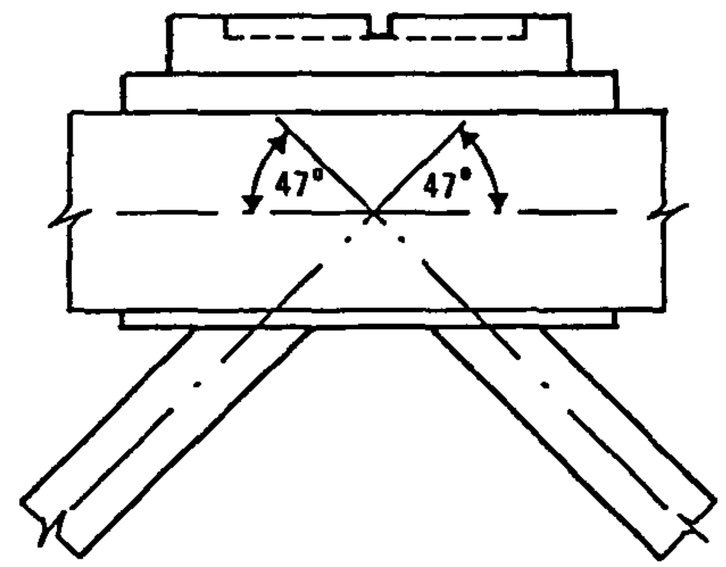

(see fig A 12 for further details)

T1 : centre joint

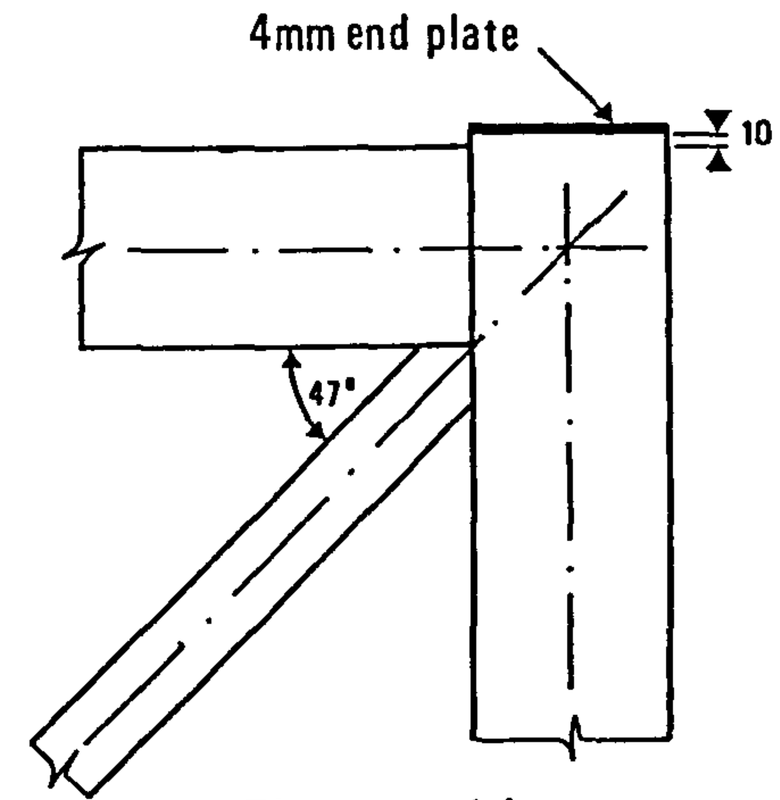

T1 : corner joint

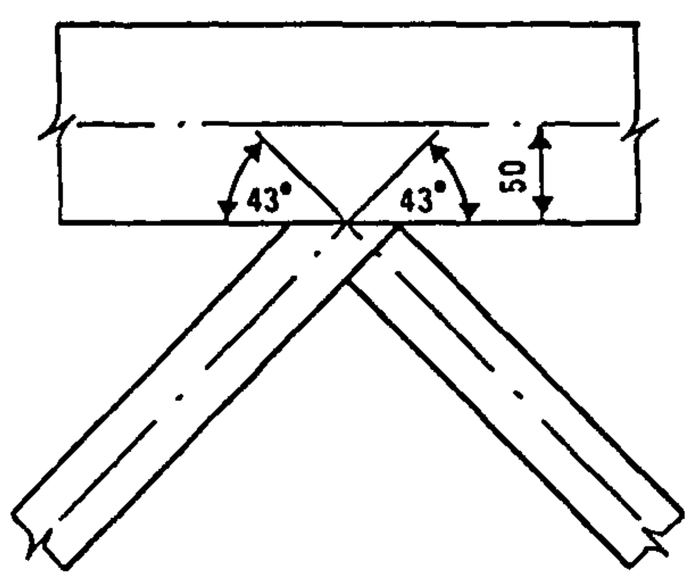

T2 : typical joint

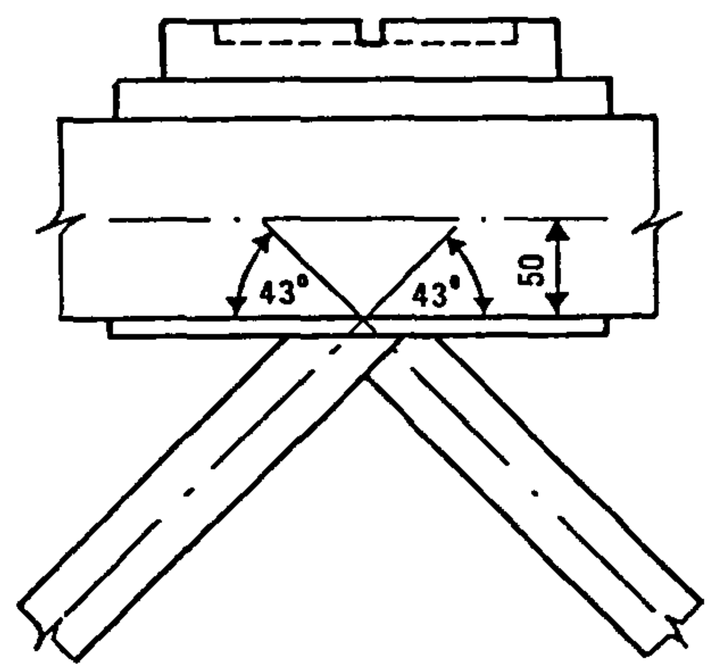

(see fig A 12 for further details)

T2 : centre joint

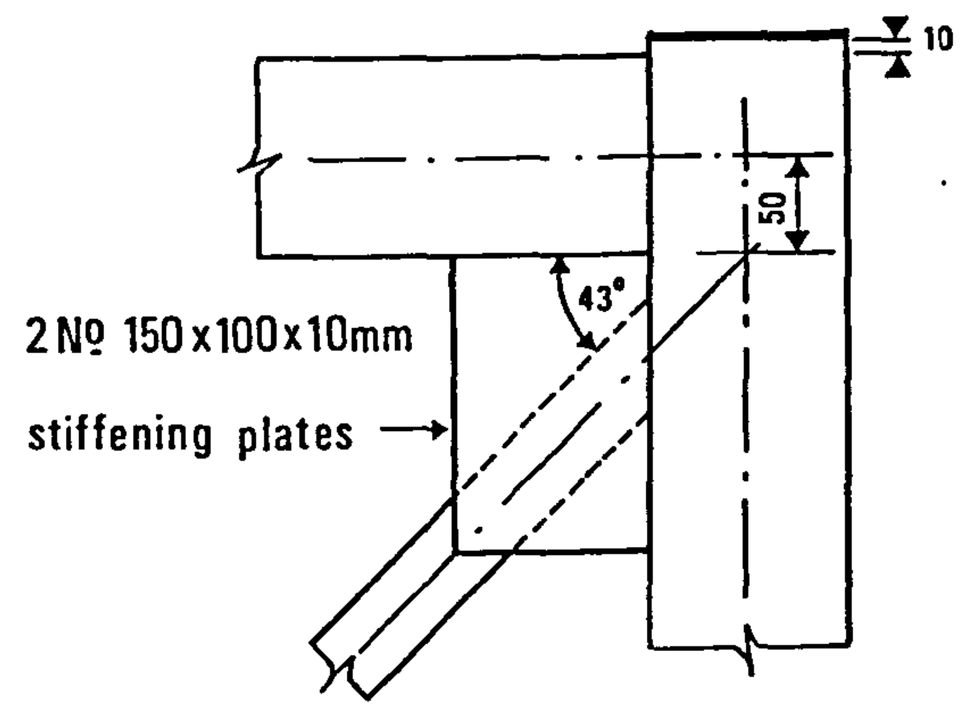

T2 : corner joint

Fig A8 Trusses T1 & T2 : Joint details.

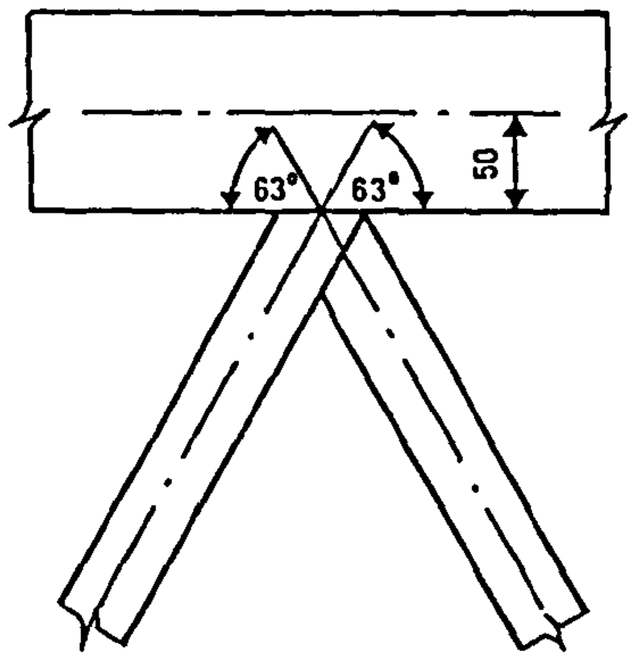

T3 : typical joint

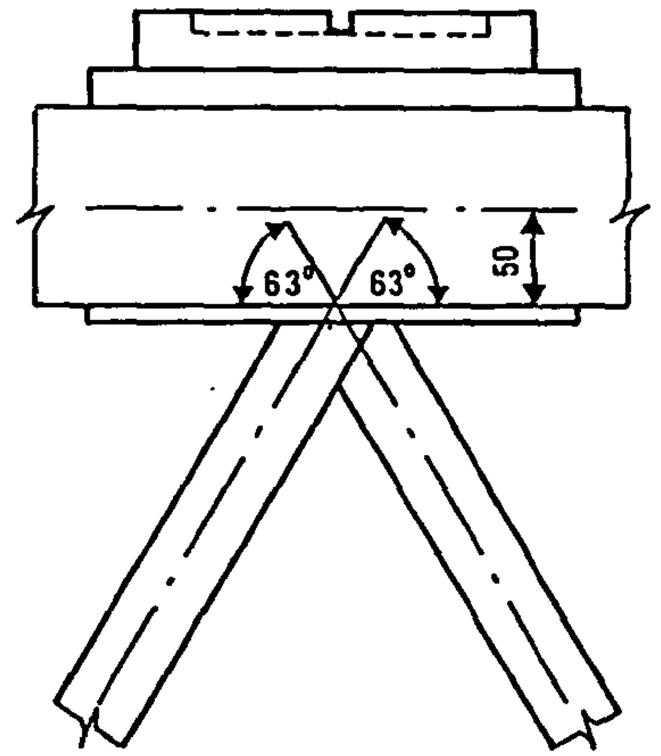

(see fig A12 for further details)

T3 : centre joint

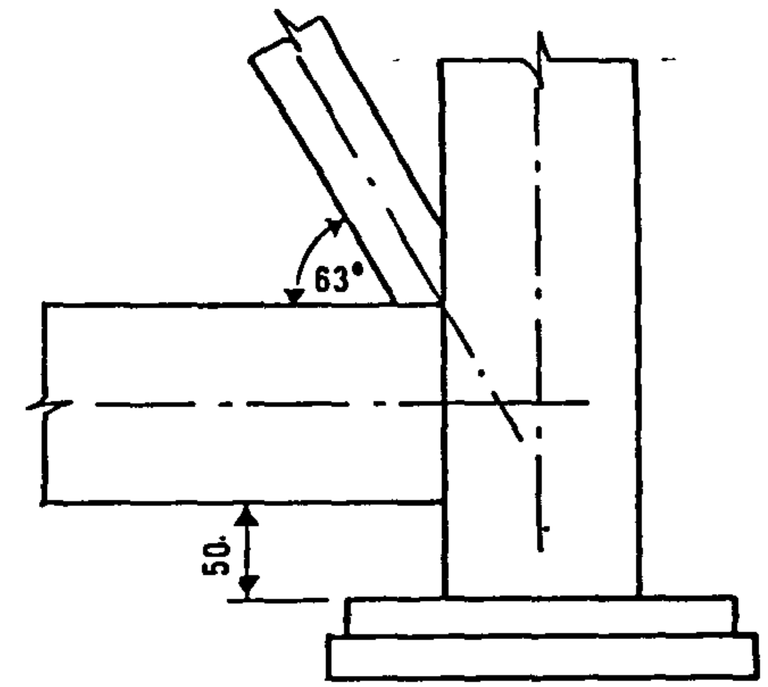

(see fig A12 for further details)

T3 : corner joint

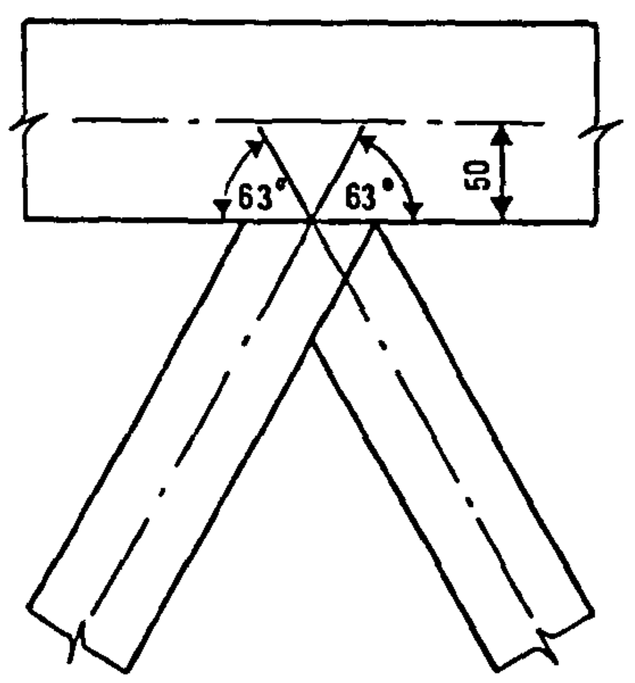

T4 : typical joint

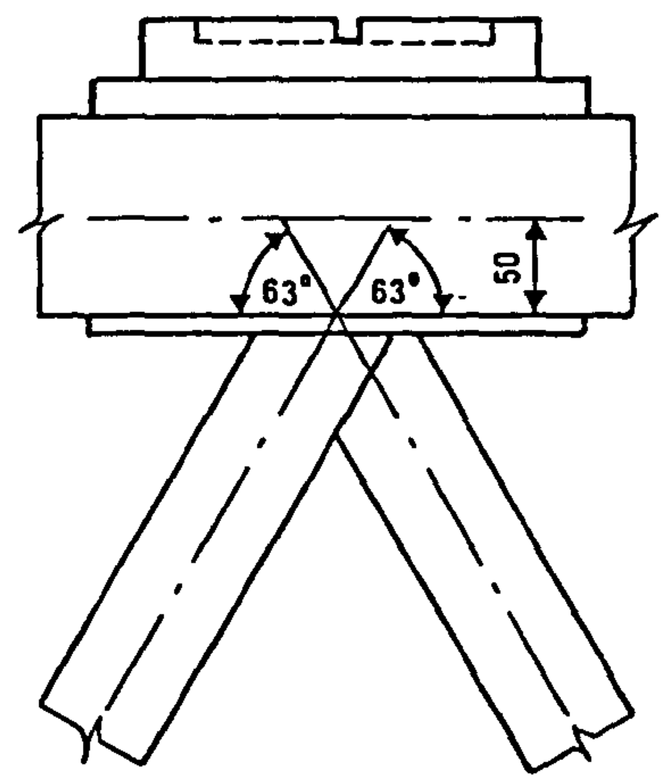

(see fig A12 for further details)

T4 : centre joint

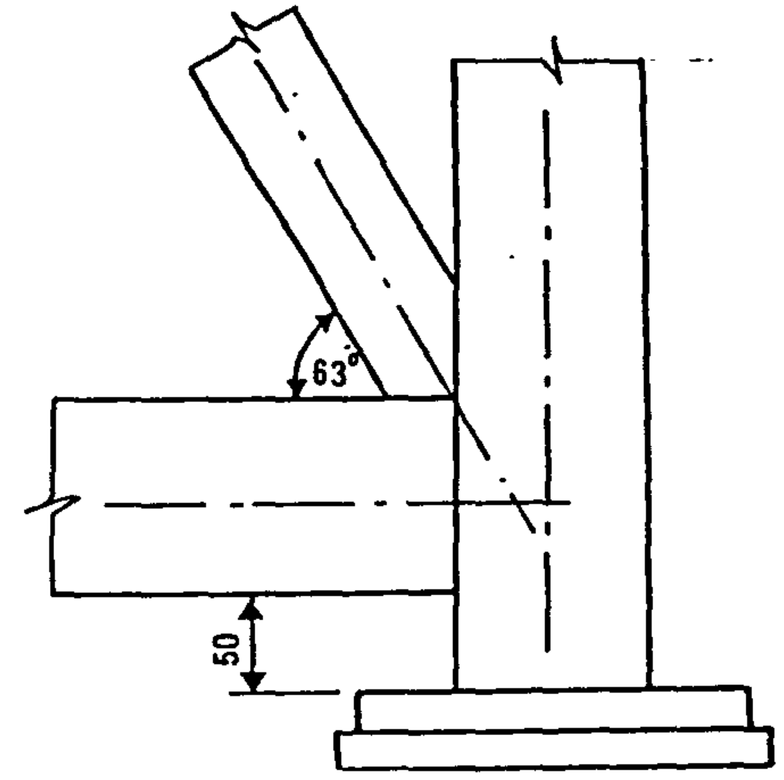

(see fig A12 for for further details)

T4 : corner joint

Fig A9 Trusses T3 & T4 : Joint details.

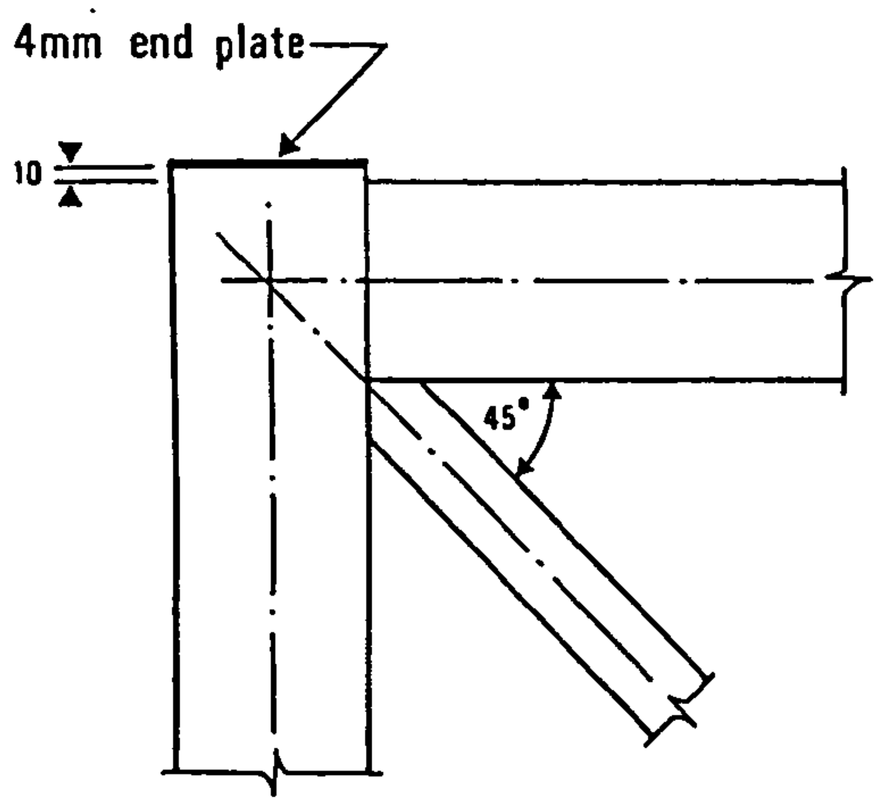

T5 : corner joint

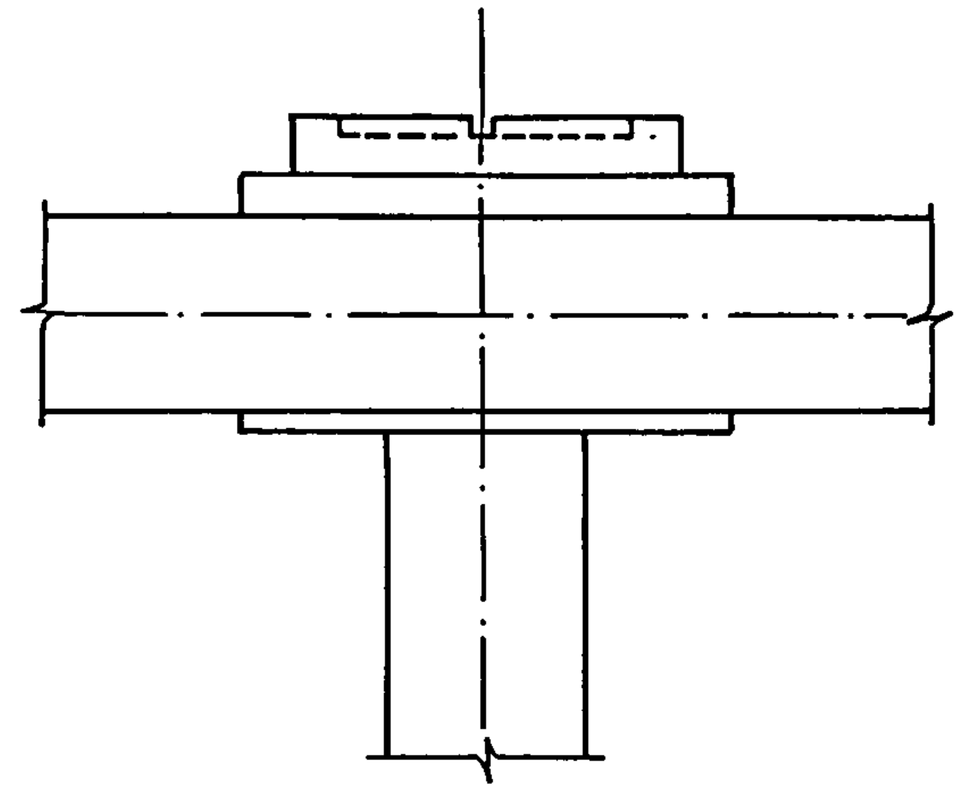

(see fig A12 for further details)

T5 : centre joint

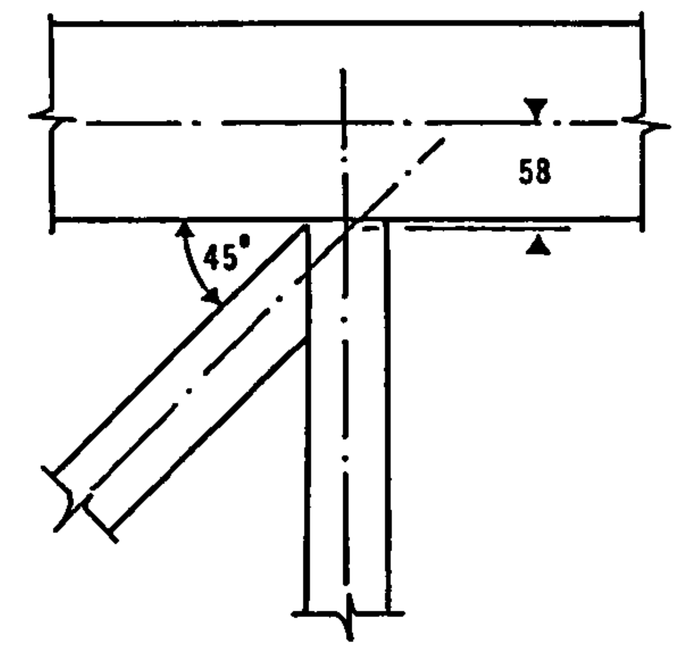

(tie overlaps strut)

T5 : typical joint

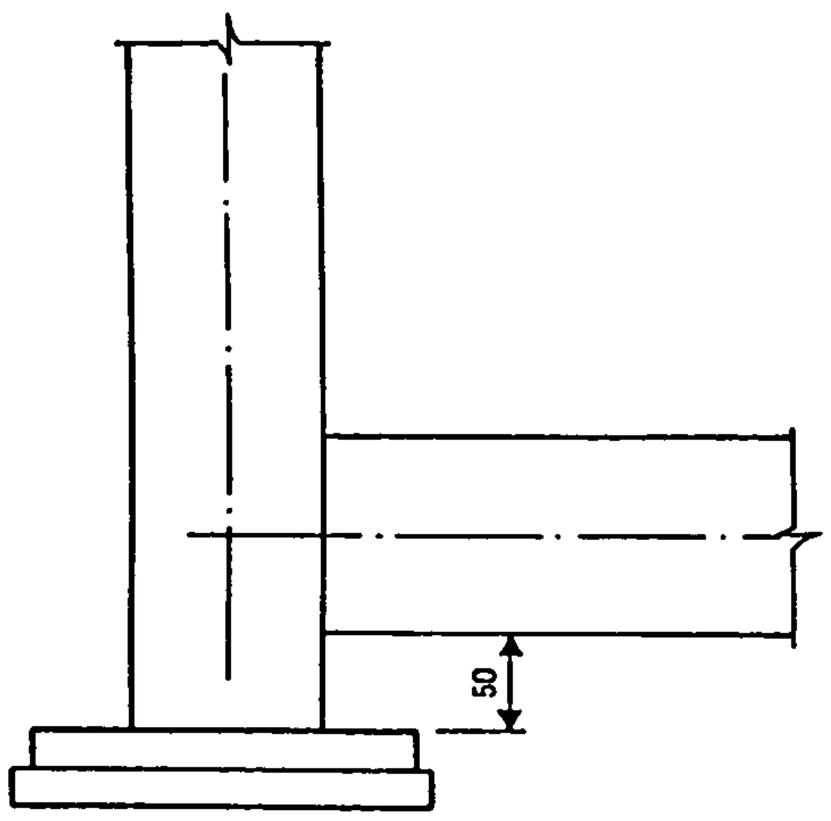

(see fig A12 for further details)

T5 : corner joint

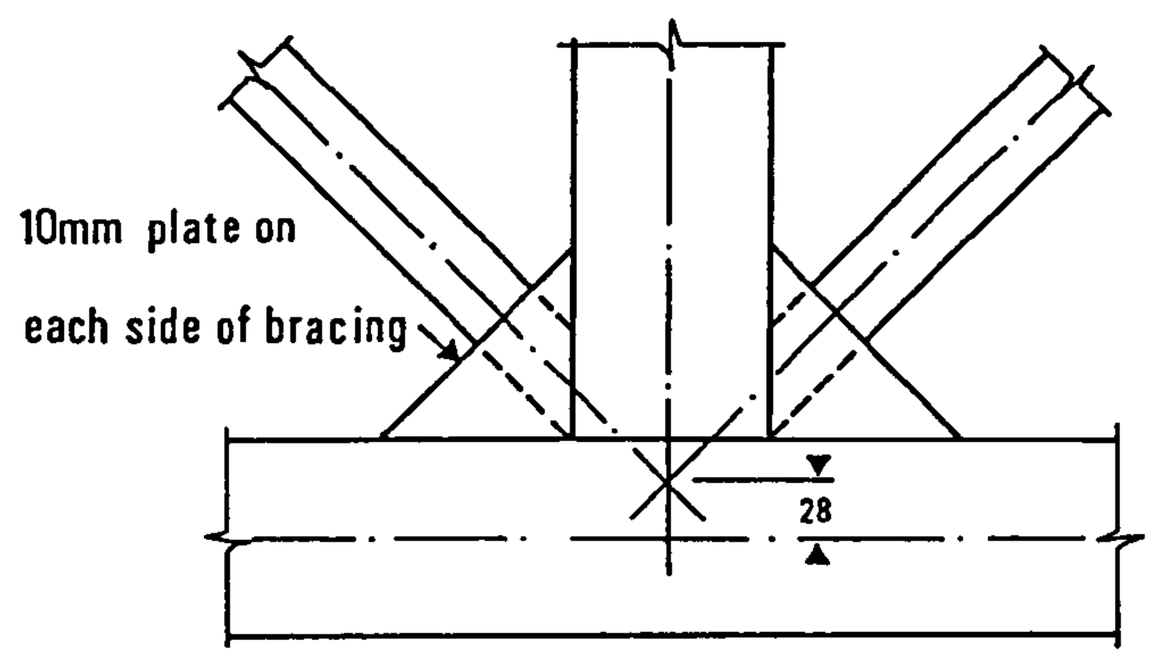

T5 : centre joint

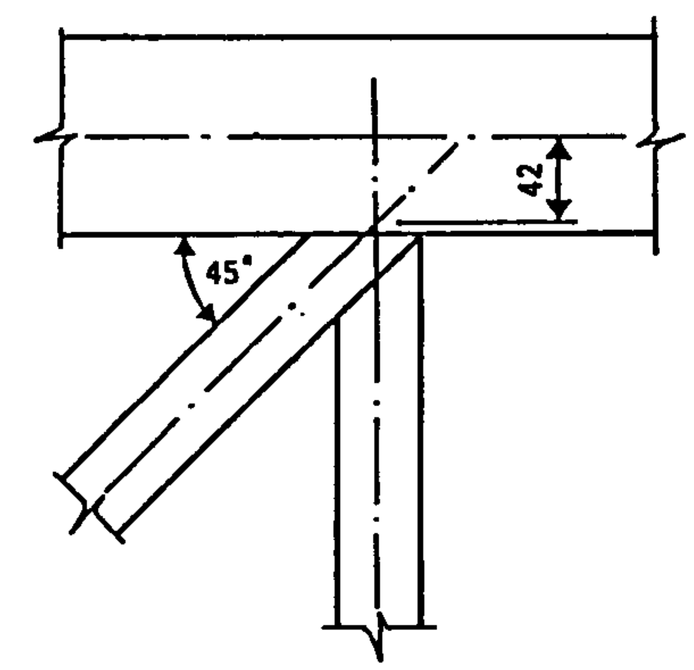

(strut overlaps tie)

T5 : typical joint

Fig A10 Truss T5 : Joint details.

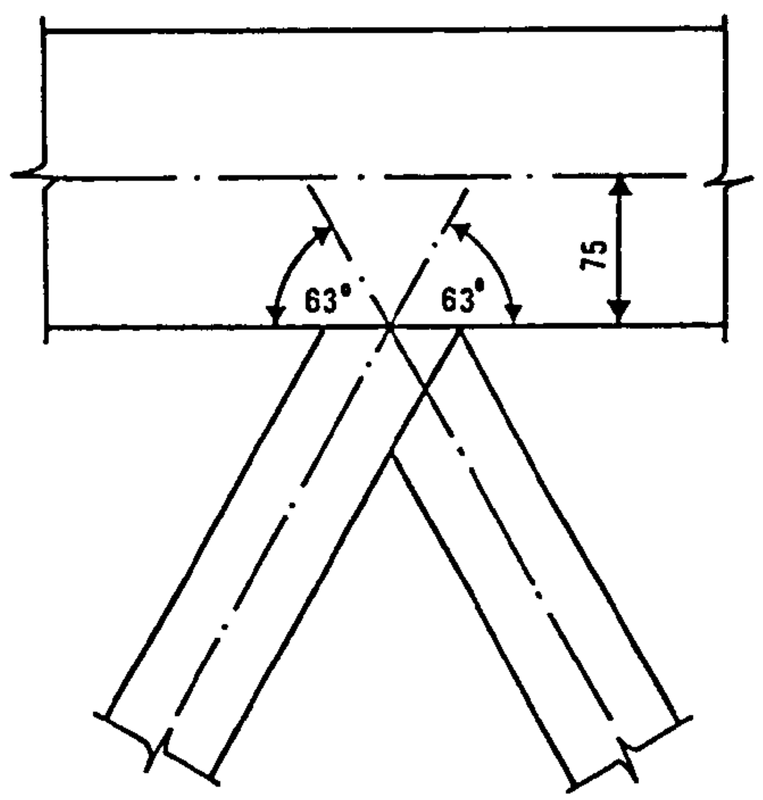

T6 : typical joint

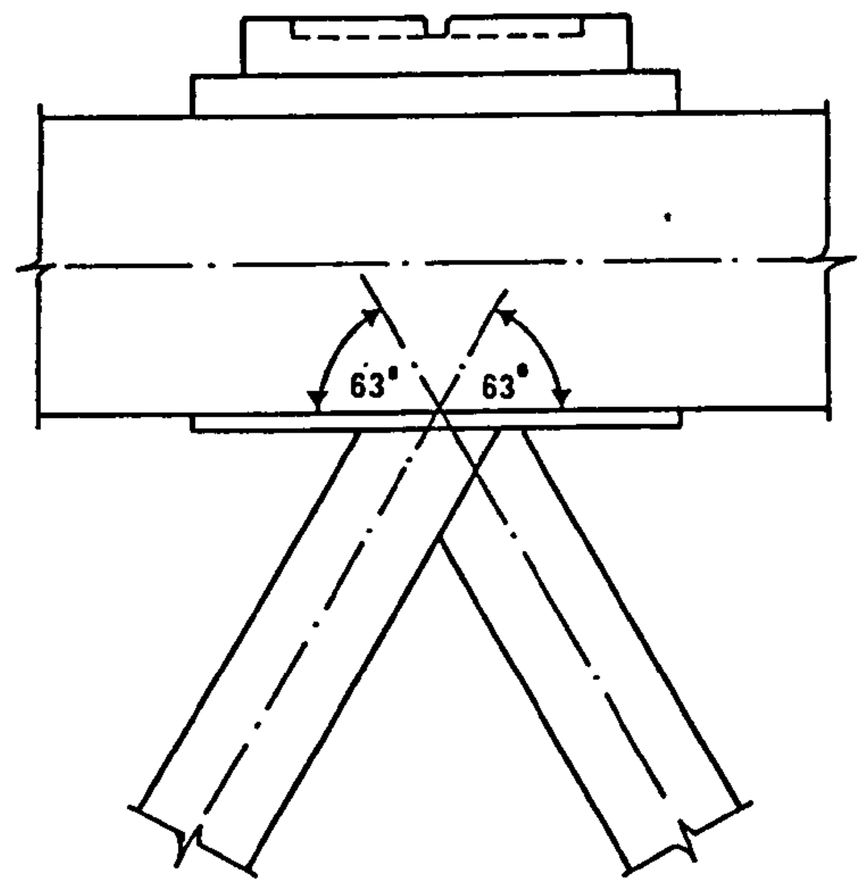

(see fig A12 for further details)

T6 : centre joint

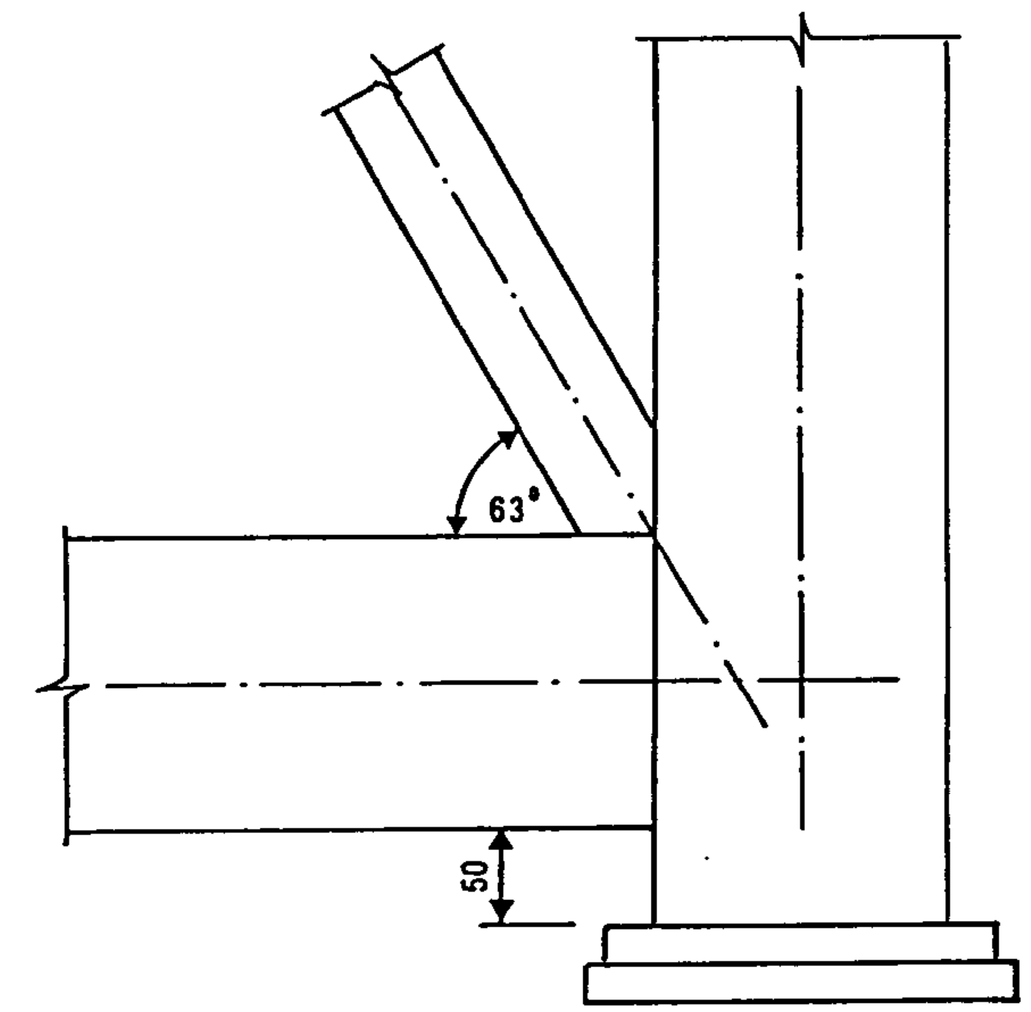

(see fig A12 for further details)

T6 : corner joint

Fig A11 Truss T6 : Joint details.

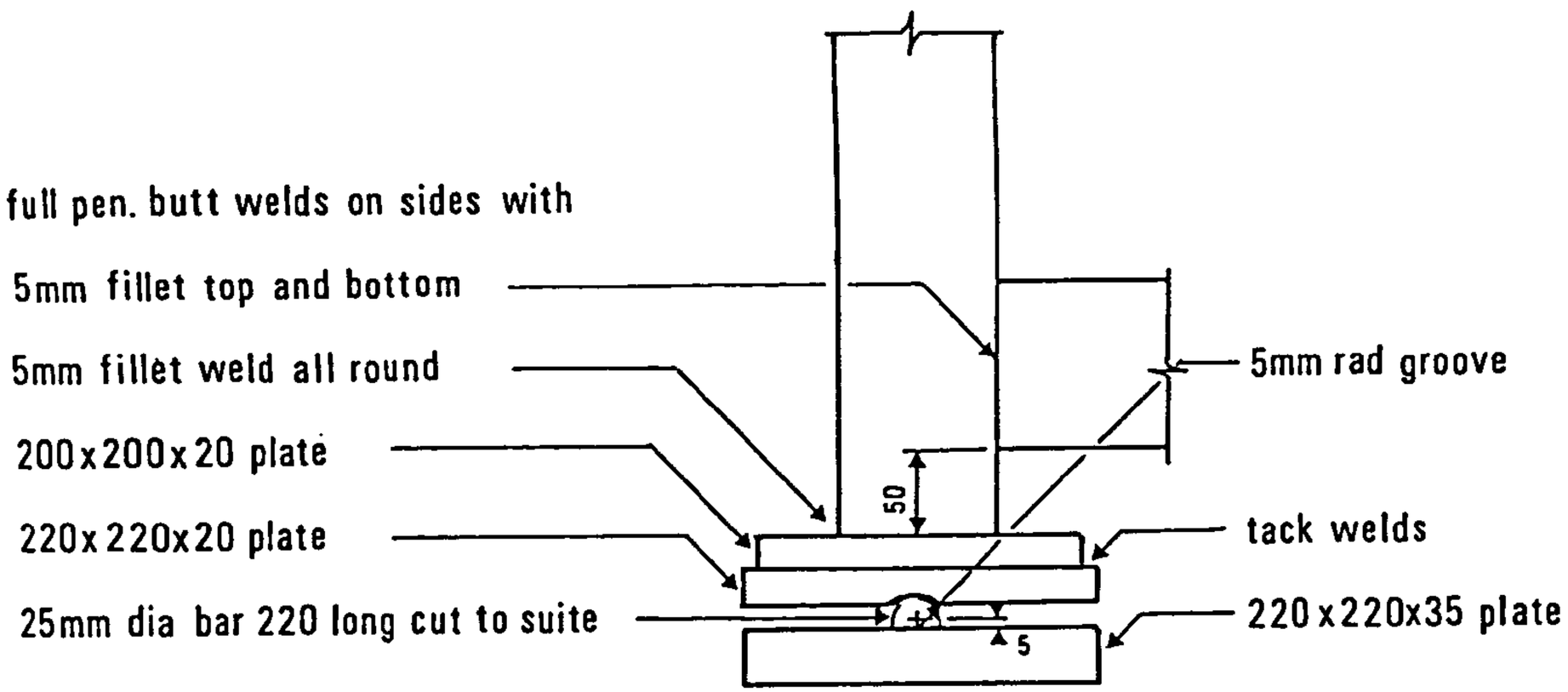

Rocker support

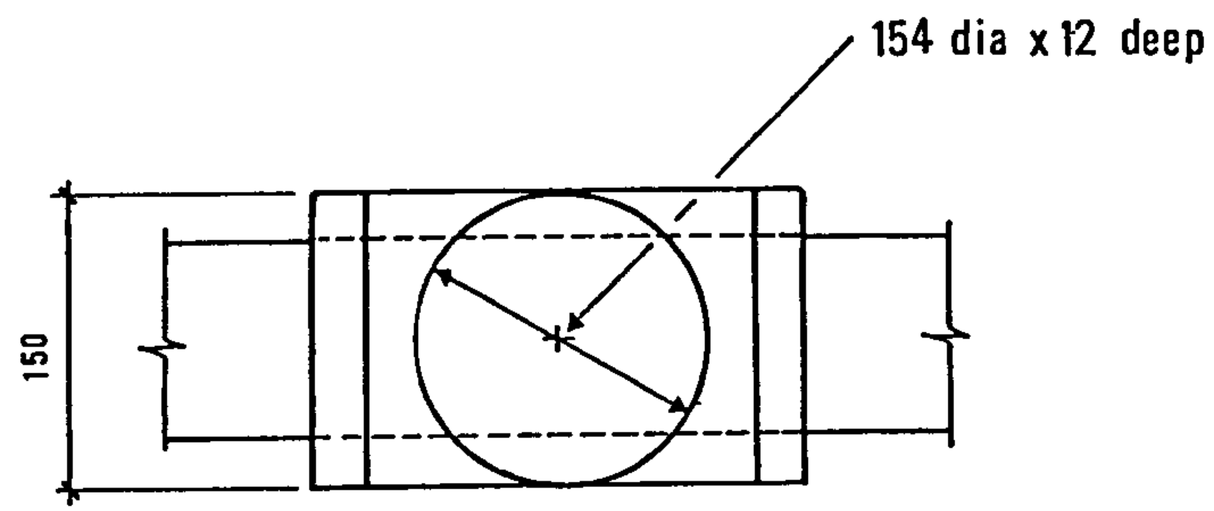

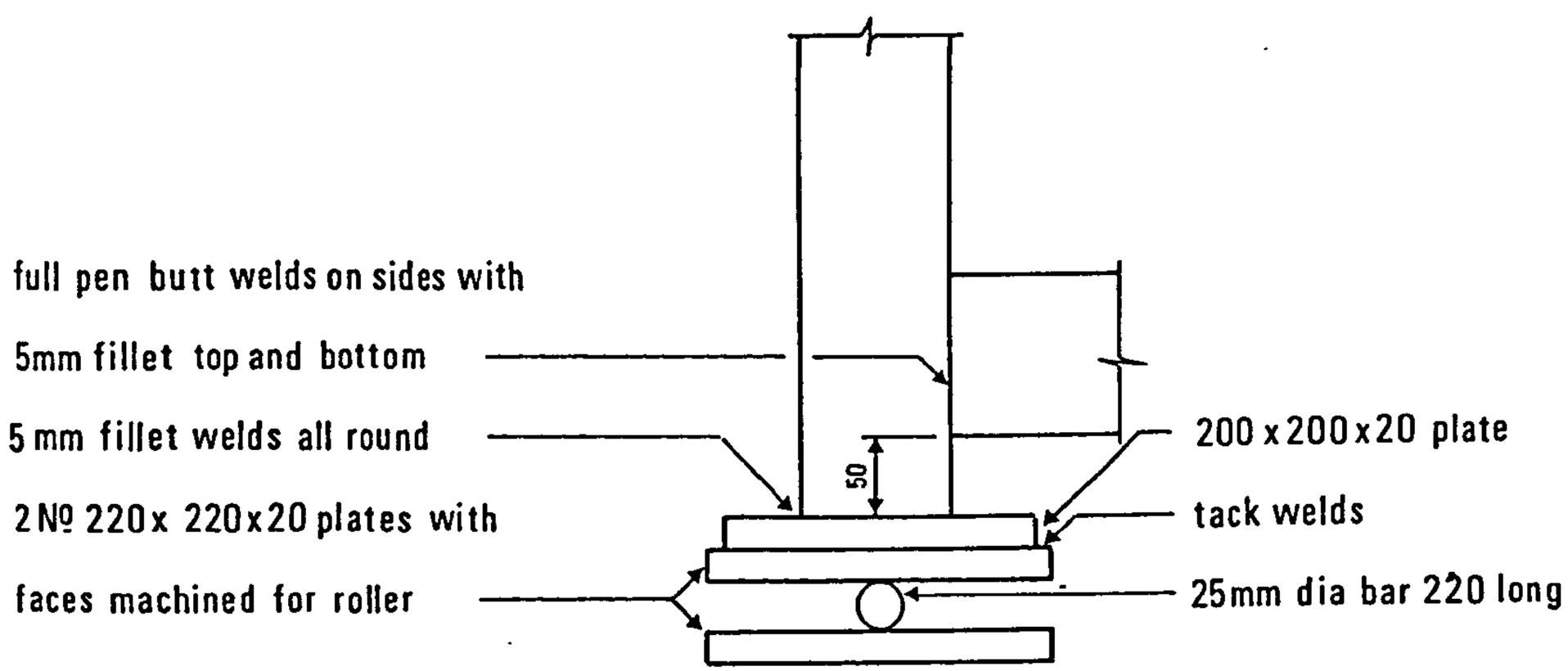

Roller support

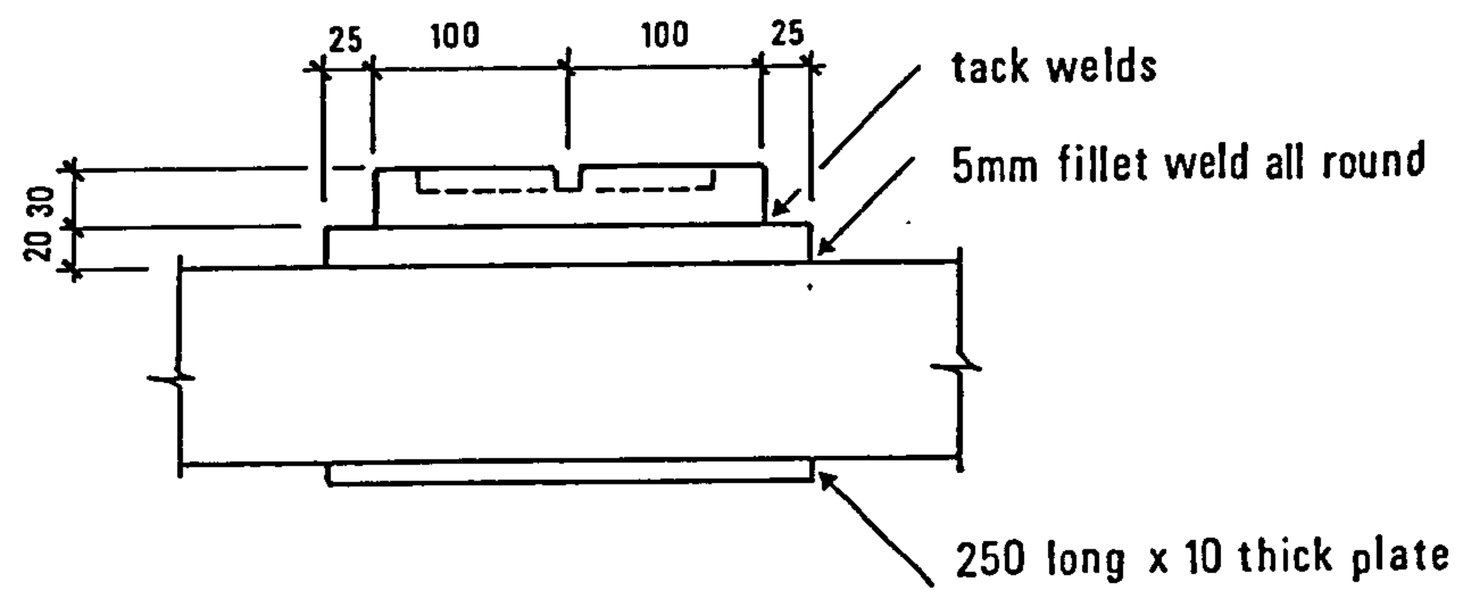

Ram bearing

Fig A12 Truss support details.

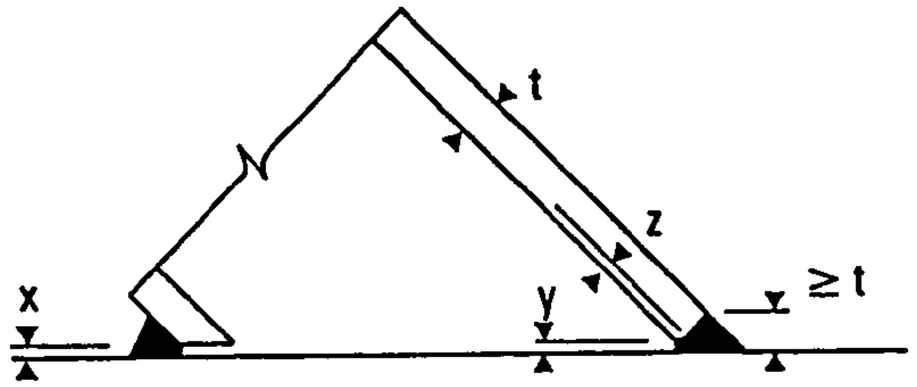

a) T1 gap

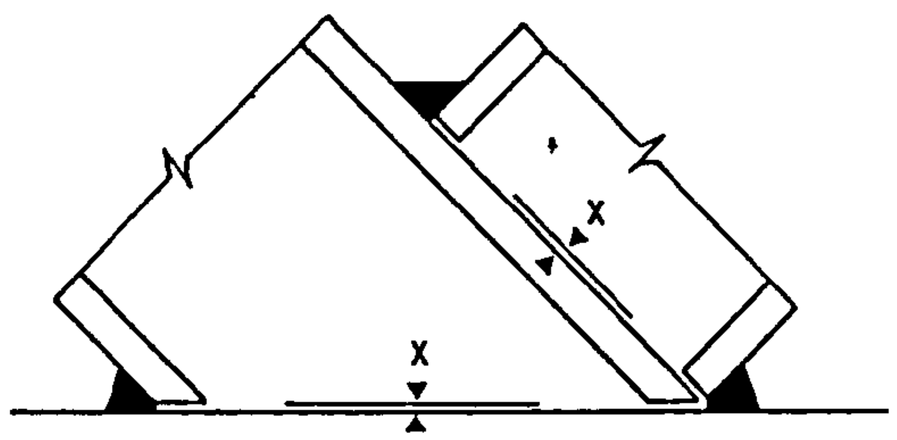

b) T2, T3, T4, T6 100% overlap

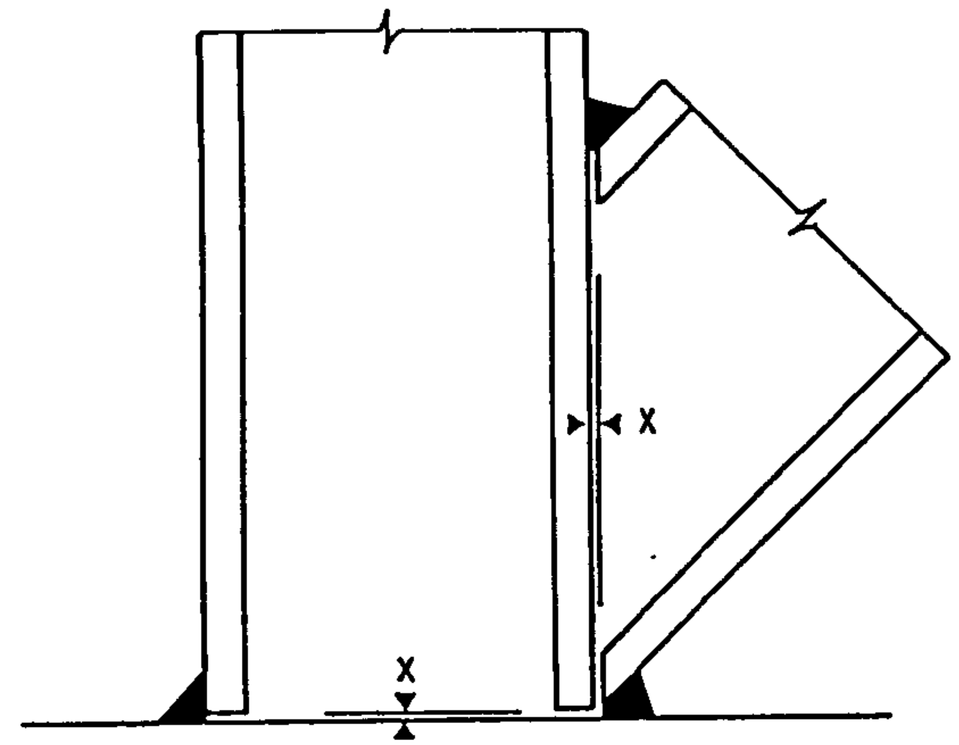

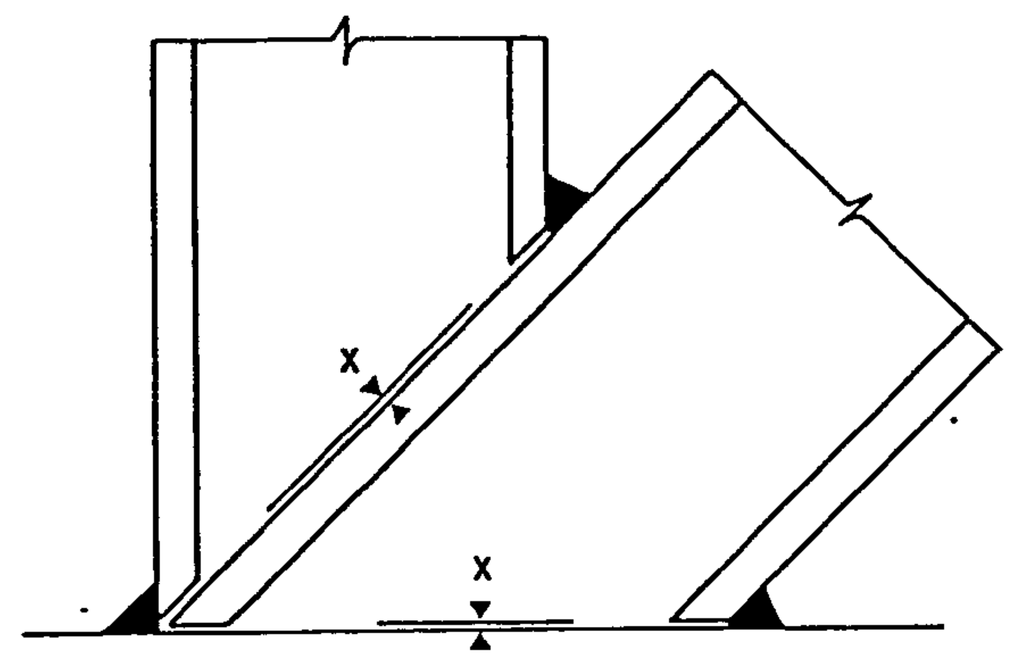

c) T5 100% overlap

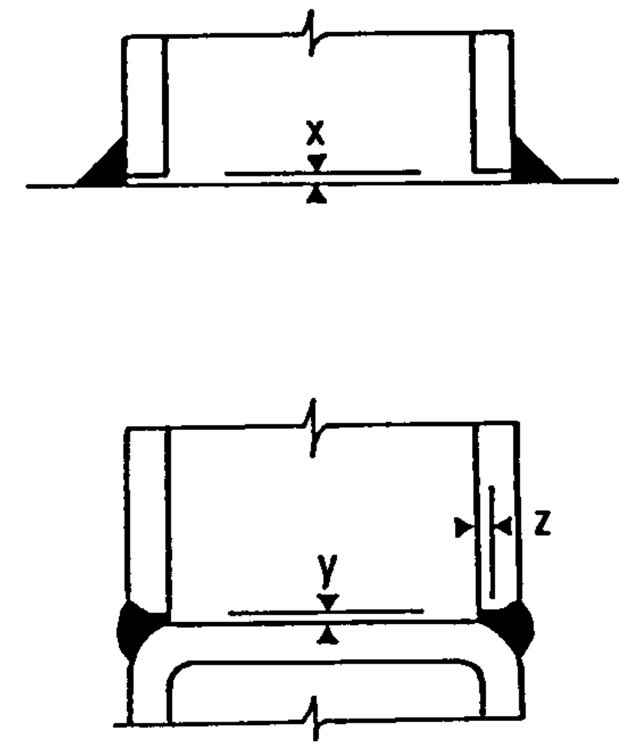

d) T1, T6

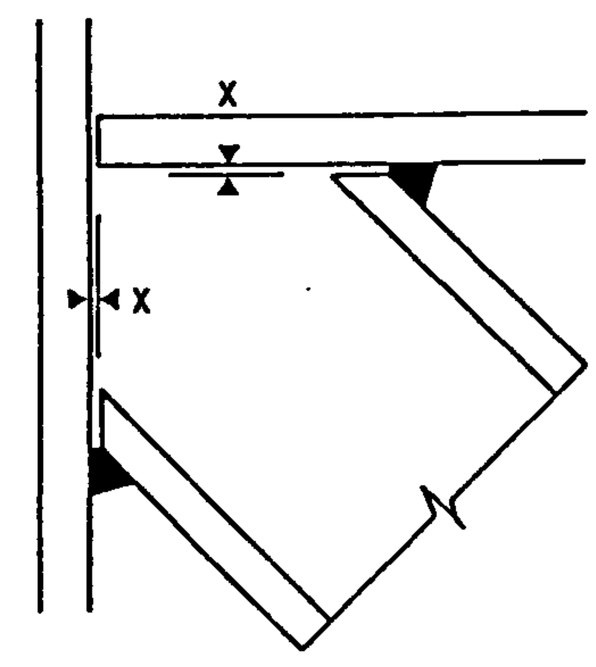

e) T1, T3, T4, T5, T6

Notes

1 a,b,c,e show connections along toe and heel of bracings

2 d shows " " sidewalls " "

3 all fillet welds are 5 mm leg length

Tolerances

$x \leq 2$mm $y = 2$-3mm $z = 1$-$2{\cdot}5$mm

Fig A13 Weld details.

APPENDIX B

TRUSS MEMBER PROPERTIES AND JOINT PARAMETERS

Table B1 Measured section and material properties for truss T1.

Member	Location	Width	Thickness	Sectional Area	Moment of Inertia	Yield Stress	Ultimate Stress	Elongation
		b	t	A	I	σ_e	σ_{ue}	
		mm	mm	mm^2	mm^{-4}	$N\ mm^{-2}$	$N\ mm^{-2}$	%
1-3,7-9	tens. chord	99.6	4.1	1540	2352873	333	470	22
3-7	tens. chord	100.2	5.1	1899	2890537	377	471	40
10-12	compr. chord	99.6	4.0	1501	2307444	316	454	24
12-15	compr. chord	99.7	5.0	1840	2783673	373	473	42
15-17	compr. chord	99.7	4.0	1512	2334041	329	446	41
18,33	tens. brac.	39.8	3.2	454	102849	334	510	34
20,31	tens. brac.	39.9	3.2	457	104707	357	493	24
22,29	tens. brac.	39.9	3.2	455	104103	352	495	35
24,27	tens. brac.	39.9	3.3	466	106109	386	506	18
19,23,28	compr. brac.	39.8	4.0	552	119281	423	510	23
21,30	compr. brac.	39.7	3.9	545	115875	381	484	23
25,26,32	compr. brac.	40.1	4.0	569	123695	435	514	42
34,35	end posts	98.6	4.1	1491	2297842	295	465	25

Notes :
1) To be read in conjunction with Fig S1.
2) Chord splices occur at the midpoints of members 3,7,12, and 15.

Table B2 Measured section and material properties for truss T2.

Member	Location	Width	Thickness	Sectional Area	Moment of Inertia	Yield Stress	Ultimate Stress	Elongation
		b	t	A	I	σ_e	σ_{ue}	
		mm	mm	mm^2	mm^{-4}	$N\ mm^{-2}$	$N\ mm^{-2}$	%
1-3,7-9	tens. chord	99.6	4.1	1555	2383315	324	467	24
3-7	tens. chord	99.8	4.9	1811	2757920	432	531	37
10-12	compr. chord	99.7	4.0	1497	2320462	314	452	24
12-15	compr. chord	99.8	4.9	1811	2757920	432	531	37
15-17	compr. chord	99.3	4.0	1467	2281494	308	461	41
18,33	tens. brac.	39.8	3.2	454	102849	334	510	34
20,31	tens. brac.	39.9	3.3	457	104707	357	493	24
22,29	tens. brac.	39.9	3.2	455	104103	352	495	35
24,27	tens. brac.	39.9	3.3	466	106109	386	506	18
19,23,25	compr. brac.	40.0	4.1	561	123232	427	541	34
28	compr. brac.	39.8	4.0	552	119281	423	510	23
21,30	compr. brac.	39.7	3.9	545	115875	381	484	23
26,32	compr. brac.	40.1	4.1	569	123695	435	514	42
34,35	endposts	98.7	4.1	1491	2297842	295	465	25

Notes :
1) To be read in conjunction with Fig S1.
2) Chord splices occur at the midpoints of members 3,7,12, and 15.

Table B3 Measured section and material properties for truss T2/2.

Member	Location	Width	Thickness	Sectional Area	Moment of Inertia	Yield Stress	Ultimate Stress	Elongation
		b	t	A	I	σ_e	σ_{ue}	
		mm	mm	mm^2	mm^{-4}	$N\ mm^{-2}$	$N\ mm^{-2}$	%
1,5	tens. chord	99.6	4.2	1555	2383315	324	467	24
1-5	tens. chord	99.8	4.9	1811	2757920	432	531	37
6	compr. chord	99.7	4.0	1497	2320462	314	452	24
6-9	compr. chord	99.8	4.9	1811	2757920	432	531	37
9	compr. chord	99.3	4.0	1467	2281494	308	461	41
10,17	tens. brac.	39.8	3.2	454	102849	334	510	34
10,17	tens. brac.	39.9	3.2	455	104103	352	495	35
12,15	tens. brac.	39.9	3.3	466	106109	386	506	18
11,13	compr. brac.	40.0	4.1	561	123232	427	541	34
16	compr. brac.	39.8	4.0	552	119281	423	510	23
14	compr. brac.	40.1	4.1	569	123695	435	514	42
34,35	post	98.7	4.1	1491	2297842	295	465	25

Notes :
1) To be read in conjunction with Fig S1.
2) Splices occur at the midpoints of members 1, 5, 6, 9, 10, and 17.

Table B4 Measured section and material properties for truss T3.

Member	Location	Width	Thickness	Sectional Area	Moment of Inertia	Yield Stress	Ultimate Stress	Elongation
		b	t	A	I	σ_e	σ_{ue}	
		mm	mm	mm^2	mm^{-4}	$N\ mm^{-2}$	$N\ mm^{-2}$	%
1-5	tens. chord	99.6	5.0	1844	2757920	370	496	37
6-11	compr. chord	99.6	5.0	1844	2757920	370	496	37
13,15 18,20	tens. brac.	40.2	3.0	429	101424	447	531	31
12,14 16	compr. brac.	40.0	4.0	550	120720	426	516	38
17,19 21	compr. brac.	40.0	4.0	550	120720	426	516	38
22,23	end posts	99.6	5.0	1844	2757920	370	496	37

Notes :
1) To be read in conjunction with Fig S1.

Table B5 Measured section and material properties for truss T4.

Member	Location	Width	Thickness	Sectional Area	Moment of Inertia	Yield Stress	Ultimate Stress	Elongation
		b	t	A	I	σ_e	σ_{ue}	
		mm	mm	mm^2	mm^{-4}	$N\ mm^{-2}$	$N\ mm^{-2}$	%
1-5	tens. chord	99.5	5.0	1817	2787182	369	487	39
6-11	compr. chord	99.5	5.0	1817	2787182	369	487	39
13-21	bracings	59.8	3.2	693	378962	345	492	30
22,23	end posts	99.5	5.0	1817	2787182	369	487	39

Notes :
1) To be read in conjunction with Fig S1.

Table B6 Measured section and material properties for truss T5.

Member	Location	Width	Thickness	Sectional Area	Moment of Inertia	Yield Stress	Ultimate Stress	Elongation
		b	t	A	I	σ_e	σ_{ue}	
		mm	mm	mm^2	mm^{-4}	$N\ mm^{-2}$	$N\ mm^{-2}$	%
1-6	tens. chord	99.6	4.9	1840	2757966	394	503	37
7-12	compr. chord	99.6	4.9	1840	2757966	394	503	37
13,15,17	tens. brac.	40.1	3.1	438	102889	485	548	37
19,21,23	tens. brac.	40.2	3.0	429	101424	447	531	31
14,16,22	compr. brac.	40.0	4.0	550	120720	426	516	38
20	compr. brac.	40.2	3.0	429	101424	447	531	31
18,24,25	posts	99.6	4.9	1840	2757966	394	503	37

Notes :
1) To be read in conjunction with Fig S1.

Table B7 Measured section and material properties for truss T6.

Member	Location	Width	Thickness	Sectional Area	Moment of Inertia	Yield Stress	Ultimate Stress	Elongation
		b	t	A	I	σ_e	σ_{ue}	
		mm	mm	mm^2	mm^{-4}	$N\ mm^{-2}$	$N\ mm^{-2}$	%
1-7	tens. chord	150.1	6.3	3610	12361525	348	469	40
8-15	compr. chord	150.1	6.3	3610	12361525	348	469	40
17,19	tens. brac.	59.9	3.1	674	373422	370	498	34
21,24	tens. brac.	60.0	3.2	691	383796	421	528	26
26,28								
16,18,20	compr. brac.	60.0	3.2	691	383796	421	528	26
22,23,25								
27,29								
30,31	end posts	150.1	6.3	3610	12361525	348	469	40

Notes :
1) To be read in conjunction with Fig S1.

Table B8 Joint properties for truss T1.

Joint	Chord					Strut					Tie				
	t_0 mm	b_0 mm	A_0 mm^2	σ_{e0} Nmm^{-2}	σ_{u0} Nmm^{-2}	t_1 mm	b_1 mm	A_1 mm^2	σ_{e1} Nmm^{-2}	σ_{u1} Nmm^{-2}	t_2 mm	b_2 mm	A_2 mm^2	σ_{e2} Nmm^{-2}	σ_{u2} Nmm^{-2}
1	5.0	99.7	1840	373	473	4.0	39.8	552	423	510	3.3	39.9	466	386	506
2	4.0	99.6	1501	316	454	3.9	39.7	545	381	484	3.2	39.9	455	352	495
3	4.0	99.6	1501	316	454	4.0	39.8	552	423	510	3.3	39.9	457	357	493
4	5.1	100.2	1899	377	471	4.1	40.1	569	435	514	3.3	39.9	466	386	506
5	5.1	100.2	1899	377	471	4.0	39.8	552	423	510	3.2	39.9	455	352	495
6	4.1	99.6	1540	333	470	3.9	39.7	545	381	484	3.3	39.9	457	357	493
7	4.1	99.6	1540	333	470	4.0	39.8	552	423	510	3.2	39.8	454	334	510
8	5.0	99.7	1840	373	473	4.0	39.8	552	423	510	3.3	39.9	466	386	506
9	4.0	99.7	1512	329	446	3.9	39.7	545	381	484	3.2	39.9	455	352	495
10	4.0	99.7	1512	329	446	4.1	40.1	569	435	514	3.3	39.9	457	357	493
11	5.1	100.2	1899	377	471	4.1	40.1	569	435	514	3.3	39.9	466	386	506
12	5.1	100.2	1899	377	471	4.0	39.8	552	423	510	3.2	39.9	455	352	495
13	4.1	99.6	1540	333	470	3.9	39.7	545	381	484	3.3	39.9	457	357	493
14	4.1	99.6	1540	333	470	4.1	40.1	569	435	514	3.2	39.8	454	334	510

Notes :
1) To be read in conjunction with Fig S2.
2) For joints 1 to 7 tie overlaps strut.
3) For joints 8 to 14 strut overlaps tie.

Table B9 Joint properties for truss T2.

Joint	Chord					Strut					Tie				
	t_0 mm	b_0 mm	A_0 mm^2	σ_{e0} Nmm^{-2}	σ_{u0} Nmm^{-2}	t_1 mm	b_1 mm	A_1 mm^2	σ_{e1} Nmm^{-2}	σ_{u1} Nmm^{-2}	t_2 mm	b_2 mm	A_2 mm^2	σ_{e2} Nmm^{-2}	σ_{u2} Nmm^{-2}
1	4.9	99.8	1811	432	531	4.1	40.0	561	427	541	3.3	39.9	466	386	506
2	4.0	99.7	1497	314	452	3.9	39.7	545	381	484	3.2	39.9	455	352	495
3	4.0	99.7	1497	314	452	4.1	40.0	561	427	541	3.3	39.9	457	357	493
4	4.9	99.8	1811	432	531	4.1	40.0	561	427	541	3.3	39.9	466	386	506
5	4.9	99.8	1811	432	531	4.1	40.0	561	427	541	3.2	39.9	455	352	495
6	4.2	99.6	1555	324	467	3.9	39.7	545	381	484	3.3	39.9	457	357	493
7	4.2	99.6	1555	324	467	4.1	40.0	561	427	541	3.2	39.8	454	334	510
8	4.9	99.8	1811	432	531	4.0	39.8	552	423	510	3.3	39.9	466	386	506
9	4.0	99.3	1467	308	461	3.9	39.7	545	381	484	3.2	39.9	455	352	495
10	4.0	99.3	1467	308	461	4.1	40.1	569	435	514	3.3	39.9	457	357	493
11	4.9	99.8	1811	432	531	4.1	40.1	569	435	514	3.3	39.9	466	386	506
12	4.9	99.8	1811	432	531	4.0	39.8	552	423	510	3.2	39.9	455	352	495
13	4.2	99.6	1555	324	467	3.9	39.7	545	381	484	3.3	39.9	457	357	493
14	4.2	99.6	1555	324	467	4.1	40.1	569	435	514	3.2	39.8	454	334	510

Notes :
1) To be read in conjunction with Fig S2.
2) For joints 1 to 7 tie overlaps strut.
3) For joints 8 to 14 strut overlaps tie.

Table B10 Joint properties for truss T3.

Joint	Chord					Strut						Tie			
	t_0 mm	b_0 mm	A_0 mm^2	σ_{e0} Nmm^{-2}	σ_{u0} Nmm^{-2}	t_1 mm	b_1 mm	A_1 mm^2	σ_{e1} Nmm^{-2}	σ_{u1} Nmm^{-2}	t_2 mm	b_2 mm	A_2 mm^2	σ_{e2} Nmm^{-2}	σ_{u2} Nmm^{-2}
1-5	5.0	99.6	1844	370	496	4.0	40.0	550	426	516	3.0	40.2	429	447	531
5-8	5.0	99.6	1844	370	496	4.0	40.0	550	426	516	3.0	40.2	429	447	531

Notes :
1) To be read in conjunction with Fig S2.
2) For joints 1 to 4 tie overlaps strut.
3) For joints 5 to 8 strut overlaps tie.

Table B11 Joint properties for truss T4.

Joint	Chord					Strut					Tie				
	t_0 mm	b_0 mm	A_0 mm^2	σ_{e0} Nmm^{-2}	σ_{u0} Nmm^{-2}	t_1 mm	b_1 mm	A_1 mm^2	σ_{e1} Nmm^{-2}	σ_{u1} Nmm^{-2}	t_2 mm	b_2 mm	A_2 mm^2	σ_{e2} Nmm^{-2}	σ_{u2} Nmm^{-2}
1-4	5.0	99.5	1817	369	487	3.2	59.8	693	345	492	3.2	59.8	693	345	492
5-8	5.0	99.5	1817	369	487	3.2	59.8	693	345	492	3.2	59.8	693	345	492

Notes :
1) To be read in conjunction with Fig S2.
2) For joints 1 to 4 tie overlaps strut.
3) For joints 5 to 8 strut overlaps tie.

Table B12 Joint properties for truss T5.

Joint	Chord					Strut					Tie				
	t_0 mm	b_0 mm	A_0 mm^2	σ_{e0} Nmm^{-2}	σ_{u0} Nmm^{-2}	t_1 mm	b_1 mm	A_1 mm^2	σ_{e1} Nmm^{-2}	σ_{u1} Nmm^{-2}	t_2 mm	b_2 mm	A_2 mm^2	σ_{e2} Nmm^{-2}	σ_{u2} Nmm^{-2}
1-4	4.9	99.6	1840	394	503	4.0	40.0	550	426	516	3.1	40.1	438	485	548
5,7	4.9	99.6	1840	394	503	3.0	40.2	429	447	531	3.0	40.2	429	447	531
6,8	4.9	99.6	1840	394	503	4.0	40.0	550	426	516	3.0	40.2	429	447	531

Notes :
1) To be read in conjunction with Fig S2.
2) For joints 1 to 4 tie overlaps strut.
3) For joints 5 to 8 strut overlaps tie.

Table B13 Joint properties for truss T6.

Joint	Chord							Strut					Tie		
	t_0 mm	b_0 mm	A_0 mm^2	σ_{e0} Nmm^{-2}	σ_{u0} Nmm^{-2}	t_1 mm	b_1 mm	A_1 mm^2	σ_{e1} Nmm^{-2}	σ_{u1} Nmm^{-2}	t_2 mm	b_2 mm	A_2 mm^2	σ_{e2} Nmm^{-2}	σ_{u2} Nmm^{-2}
1,4,6	6.3	150.1	3610	348	469	3.2	60.0	691	421	528	3.2	60.0	691	421	528
2,3	6.3	150.1	3610	348	469	3.2	60.0	691	421	528	3.1	59.9	674	370	498
5,6															
7-12	6.3	150.1	3610	348	469	3.2	60.0	691	421	528	3.2	60.0	691	421	528

Notes :

1) To be read in conjunction with Fig S2.
2) For joints 1 to 6 tie overlaps strut.
3) For joints 7 to 12 strut overlaps tie.

Table B14 Centre joint properties for trusses T1, T2, T3, T4, & T6.

Truss	Joint	Chord					Struts				
		t_0 mm	b_0 mm	A_0 mm^2	σ_{e0} Nmm^{-2}	σ_{u0} Nmm^{-2}	t_1 mm	b_1 mm	A_1 mm^2	σ_{e1} Nmm^{-2}	σ_{u1} Nmm^{-2}
T1	15	5.0	99.7	1840	373	473	4.1	40.1	569	435	514
T2	15	4.9	99.8	1811	432	531	4.1	40.0	561	427	541
							4.1	40.1	569	435	514
T3	9	5.0	99.6	1844	370	496	4.0	40.0	550	426	516
T4	9	5.0	99.5	1817	369	487	3.2	59.8	693	345	492
T6	13	6.3	150.1	3610	348	469	3.2	60.0	691	421	528

Notes :
1) To be read in conjunction with Fig S2.

Table B15 Centre joint properties for trusses T5.

Joint	Chord					Vertical Post				
	t_0 mm	b_0 mm	A_0 mm^2	σ_{e0} Nmm^{-2}	σ_{u0} Nmm^{-2}	t_1 mm	b_1 mm	A_1 mm^2	σ_{e1} Nmm^{-2}	σ_{u1} Nmm^{-2}
9	4.9	99.6	1840	394	503	4.9	99.6	1840	394	503

Table B16 Centre joint properties for trusses T5.

Joint	Chord					Ties					Vertical Post				
	t_0 mm	b_0 mm	A_0 mm^2	σ_{e0} Nmm^{-2}	σ_{u0} Nmm^{-2}	t_2 mm	b_2 mm	A_2 mm^2	σ_{e2} Nmm^{-2}	σ_{u2} Nmm^{-2}	t_3 mm	b_3 mm	A_3 mm^2	σ_{e3} Nmm^{-2}	σ_{u3} Nmm^{-2}
14	4.9	99.6	1840	394	503	3.1	40.1	438	485	548	4.9	99.6	1840	394	503
						3.0	40.2	429	447	531					

Notes :
1) To be read in conjunction with Fig S2.

Table B17 Corner joint properties for trusses T1, T2 & T5.

Truss	Joint	Chord					Diagonal Tie					Vertical Post				
		t_0 mm	b_0 mm	A_0 mm^2	σ_{e0} Nmm^{-2}	σ_{u0} Nmm^{-2}	t_2 mm	b_2 mm	A_2 mm^2	σ_{e2} Nmm^{-2}	σ_{u2} Nmm^{-2}	t_3 mm	b_3 mm	A_3 mm^2	σ_{e3} Nmm^{-2}	σ_{u3} Nmm^{-2}
T1	16	4.0	99.6	1501	316	454	3.2	39.8	454	334	510	4.1	98.6	1491	295	465
	17	4.1	99.6	1540	333	470						4.1	98.6	1491	295	465
	18	4.0	99.7	1512	329	446	3.2	39.8	454	334	510	4.1	98.6	1491	295	465
	19	4.1	99.6	1540	333	470						4.1	98.6	1491	295	465
T2	16	4.0	99.7	1497	324	467	3.2	39.8	454	334	510	4.1	98.6	1491	295	465
	17	4.2	99.6	1555	324	467						4.1	98.6	1491	295	465
	18	4.0	99.3	1467	308	461	3.2	39.8	454	334	510	4.1	98.6	1491	295	465
	19	4.2	99.6	1555	324	467						4.1	98.6	1491	295	465
T5	10	4.9	99.6	1840	394	503	3.1	40.1	438	485	548	4.9	99.6	1840	394	503
	11	4.9	99.6	1840	394	503						4.9	99.6	1840	394	503
	12	4.9	99.6	1840	394	503	3.0	40.2	429	447	531	4.9	99.6	1840	394	503
	13	4.9	99.6	1840	394	503						4.9	99.6	1840	394	503

Notes :

1) To be read in conjunction with Fig S2.

Table B18 Corner joint properties for trusses T3, T4 & T6.

Truss	Joint	Chord					Diagonal Strut					Vertical Post				
		t_0 mm	b_0 mm	A_0 mm^2	σ_{e0} Nmm^{-2}	σ_{u0} Nmm^{-2}	t_1 mm	b_1 mm	A_1 mm^2	σ_{e1} Nmm^{-2}	σ_{u1} Nmm^{-2}	t_3 mm	b_3 mm	A_3 mm^2	σ_{e3} Nmm^{-2}	σ_{u3} Nmm^{-2}
T3	10	5.0	99.6	1844	370	496						5.0	99.6	1844	370	496
	11	5.0	99.6	1844	370	496	4.0	40.0	550	426	516	5.0	99.6	1844	370	496
	12	5.0	99.6	1844	370	496						5.0	99.6	1844	370	496
	13	5.0	99.6	1844	370	496	4.0	40.0	550	426	516	5.0	99.6	1844	370	496
T4	10	5.0	99.5	1817	369	487						5.0	99.5	1817	369	487
	11	5.0	99.5	1817	369	487	3.2	59.8	693	345	492	5.0	99.5	1817	369	487
	12	5.0	99.5	1817	369	487						5.0	99.5	1817	369	487
	13	5.0	99.5	1817	369	487	3.2	59.8	693	345	492	5.0	99.5	1817	369	487
T6	14	6.3	150.1	3610	348	469						6.3	150.1	3610	348	469
	15	6.3	150.1	3610	348	469	3.2	60.0	691	421	528	6.3	150.1	3610	348	469
	16	6.3	150.1	3610	348	469						6.3	150.1	3610	348	469
	17	6.3	150.1	3610	348	469	3.2	60.0	691	421	528	6.3	150.1	3610	348	469

Notes :
1) To be read in conjunction with Fig S2.

Table B19 Joint parameters for truss T1.

Joint	θ_1	θ_2	β	b_0/t_0	b_1/t_1	b_2/t_2	b_1/b_2
1	47.0	47.0	0.4	20.1	10.0	12.1	1.0
2	47.0	47.0	0.4	25.0	10.3	12.4	1.0
3	47.0	47.0	0.4	25.0	10.0	12.3	1.0
4	47.0	47.0	0.4	19.6	9.9	12.1	1.0
5	47.0	47.0	0.4	19.6	10.0	12.4	1.0
6	47.0	47.0	0.4	24.3	10.3	12.3	1.0
7	47.0	47.0	0.4	24.3	10.0	12.4	1.0
8	47.0	47.0	0.4	20.1	10.0	12.1	1.0
9	47.0	47.0	0.4	24.7	10.3	12.4	1.0
10	47.0	47.0	0.4	24.7	9.9	12.3	1.0
11	47.0	47.0	0.4	19.6	9.9	12.1	1.0
12	47.0	47.0	0.4	19.6	10.0	12.4	1.0
13	47.0	47.0	0.4	24.3	10.3	12.3	1.0
14	47.0	47.0	0.4	24.3	9.9	12.4	1.0

Notes :
1) To be read in conjunction with Fig S2.
2) For joints 1 - 7 the tie overlaps the strut.
3) For joints 8 - 14 the strut overlaps the tie.

Table B20 Joint parameters for truss T2.

Joint	θ_1	θ_2	β	b_0/t_0	b_1/t_1	b_2/t_2	b_1/b_2
1	42.9	42.9	0.4	20.4	9.8	12.1	1.0
2	42.9	42.9	0.4	24.9	10.3	12.4	1.0
3	42.9	42.9	0.4	24.9	9.8	12.3	1.0
4	42.9	42.9	0.4	20.4	9.8	12.1	1.0
5	42.9	42.9	0.4	20.4	9.8	12.4	1.0
6	42.9	42.9	0.4	24.0	10.3	12.3	1.0
7	42.9	42.9	0.4	24.0	9.8	12.4	1.0
8	42.9	42.9	0.4	20.4	10.0	12.1	1.0
9	42.9	42.9	0.4	25.0	10.3	12.4	1.0
10	42.9	42.9	0.4	25.0	9.9	12.3	1.0
11	42.9	42.9	0.4	20.4	9.9	12.1	1.0
12	42.9	42.9	0.4	20.4	10.0	12.4	1.0
13	42.9	42.9	0.4	24.0	10.3	12.3	1.0
14	42.9	42.9	0.4	24.0	9.9	12.4	1.0

Notes :
1) To be read in conjunction with Fig S2.
2) For joints 1 - 7 the tie overlaps the strut.
3) For joints 8 - 14 the strut overlaps the tie.

Table B21 Joint parameters for truss T3.

Joint	θ_1	θ_2	β	b_0/t_0	b_1/t_1	b_2/t_2	b_1/b_2
1-4	63.3	63.3	0.4	20.0	10.1	13.3	1.0
5-8	63.3	63.3	0.4	20.0	10.1	13.3	1.0

Notes :

1) To be read in conjunction with Fig S2.
2) For joints 1 - 4 the tie overlaps the strut.
3) For joints 5 - 8 the strut overlaps the tie.

Table B22 Joint parameters for truss T4.

Joint	θ_1	θ_2	β	b_0/t_0	b_1/t_1	b_2/t_2	b_1/b_2
1-4	63.3	63.3	0.6	19.9	18.9	18.9	1.0
5-8	63.3	63.3	0.6	19.9	18.9	18.9	1.0

Notes :

1) To be read in conjunction with Fig S2.
2) For joints 1 - 4 the tie overlaps the strut.
3) For joints 5 - 8 the strut overlaps the tie.

Table B23 Joint parameters for truss T5.

Joint	θ_1	θ_2	β	b_0/t_0	b_1/t_1	b_2/t_2	b_1/b_2
1-4	90.0	45.0	0.4	20.3	10.1	13.0	1.0
5,7	90.0	45.0	0.4	20.3	13.3	13.3	1.0
6,8	90.0	45.0	0.4	20.3	10.1	13.3	1.0

Notes :

1) To be read in conjunction with Fig S2.
2) For joints 1 - 4 the tie overlaps the strut.
3) For joints 5 - 8 the strut overlaps the tie.

Table B24 Joint parameters for truss T6.

Joint	θ_1	θ_2	β	b_0/t_0	b_1/t_1	b_2/t_2	b_1/b_2
1,4	63.3	63.3	0.4	24.0	18.9	18.9	1.0
2,3	63.3	63.3	0.4	24.0	18.9	19.5	1.0
5,6							
7-12	63.3	63.3	0.4	24.0	18.9	18.9	1.0

Notes :
1) To be read in conjunction with Fig S2.
2) For joints 1 - 6 the tie overlaps the strut.
3) For joints 7 - 12 the strut overlaps the tie.

Table B25 Corner joint parameters for trusses T1,.T2 &T5.

Truss	Joint	θ_2	β	b_0/t_0	b_2/t_2	b_3/b_3
T1	16	47.0	1.0	24.9	12.4	24.0
	17			24.3		24.0
	18	47.0	1.0	24.9	12.4	24.0
	19			24.3		24.0
T2	16	42.9	1.0	24.9	12.4	24.0
	17			23.7		24.0
	18	42.9	1.0	24.8	12.4	24.0
	19			23.7		24.0
T5	10	45.0	1.0	20.3	12.9	20.3
	11			20.3		20.3
	12	45.0	1.0	20.3	13.4	20.3
	13			20.3		20.3

Notes :
1) To be read in conjunction with Fig S2.

Table B26 Corner joint parameters for trusses T3,.T4 &T6.

Truss	Joint	θ_1	β	b_0/t_0	b_1/t_1	b_3/b_3
T3	10			19.9		19.9
	11	63.3	1.0	19.9	10.0	19.9
	12			19.9		19.9
	13	63.3	1.0	19.9	10.0	19.9
T4	10			19.9		19.9
	11	63.3	1.0	19.9	18.7	19.9
	12			19.9		19.9
	13	63.3	1.0	19.9	18.7	19.9
T6	14			23.8		23.8
	15	63.3	1.0	23.8	18.8	23.8
	16			23.8		23.8
	17	63.3	1.0	23.8	18.8	23.8

Notes :
1) To be read in conjunction with Fig S2.

APPENDIX C

STRAIN GAUGE POSITIONS

Table C1 Strain gauge positions for truss T1.

Joint	Joint type	Dimensions 1 mm	2 mm	3 mm	4 mm
1 - 6, 8 - 13	A	300	160	160	300
7, 14	A	200	160	160	300
15	B	300	160	160	300
16, 18	C	250	160	150	
17, 19	D	150		150	

Note :
1) To be read in conjunction with Fig C1 and Fig S2.

Table C2 Strain gauge positions for truss T2.

Joint	Joint type	Dimensions 1 mm	2 mm	3 mm	4 mm
1 - 6, 8 - 13	A	300	160	160	300
7, 14	A	200	160	160	300
15	B	300	160	160	300
16, 18	C	250	160	150	
17, 19	D	150		150	

Note :
1) To be read in conjunction with Fig C2 and Fig S2.

Table C3 Strain gauge positions for truss T3.

Joint	Joint type	Dimensions 1 mm	2 mm	3 mm	4 mm
1, 3, 4, 5, 7, 8	A	200	160	160	200
2, 6	A	200	160	160	142
9	B	200	160	160	200
10, 12	C	142		200	
11, 13	D	200	160	200	

Note :
1) To be read in conjunction with Fig C3 and Fig S2.

Table C4 Strain gauge positions for truss T4.

Joint	Joint type	Dimensions 1 mm	2 mm	3 mm	4 mm
3, 4, 7, 8	A	200	160	160	200
1, 5	A	300	160	160	200
2, 6	A	200	160	160	137
9	B	300	160	160	300
10, 12	C	137		200	
11, 13	D	200	160	200	

Note :
1) To be read in conjunction with Fig C3 and Fig S2.

Table C5 Strain gauge positions for truss T5.

Joint	Joint type	Dimensions 1 mm	2 mm	3 mm	4 mm
3, 4, 7, 8	A	200	160	160	200
1, 5	A	300	160	160	200
2, 6	A	200	160	160	200
9	B	300	200		
10, 12	C	200		200	
11, 13	D	200	160	200	
14	E	200	160	200	

Note :
1) To be read in conjunction with Fig C4 and Fig S2.

Table C6 Strain gauge positions for truss T6.

Joint	Joint type	Dimensions 1 mm	2 mm	3 mm	4 mm
2, 4, 5, 6	A	200	160	160	200
8, 10, 11, 12	A	200	160	160	200
1, 7	A	300	160	160	200
3, 9	A	200	160	160	137
13	B	300	160	160	300
14, 16	C	137		200	
15, 17	D	200	160	200	

Note :
1) To be read in conjunction with Fig C3 and Fig S2.

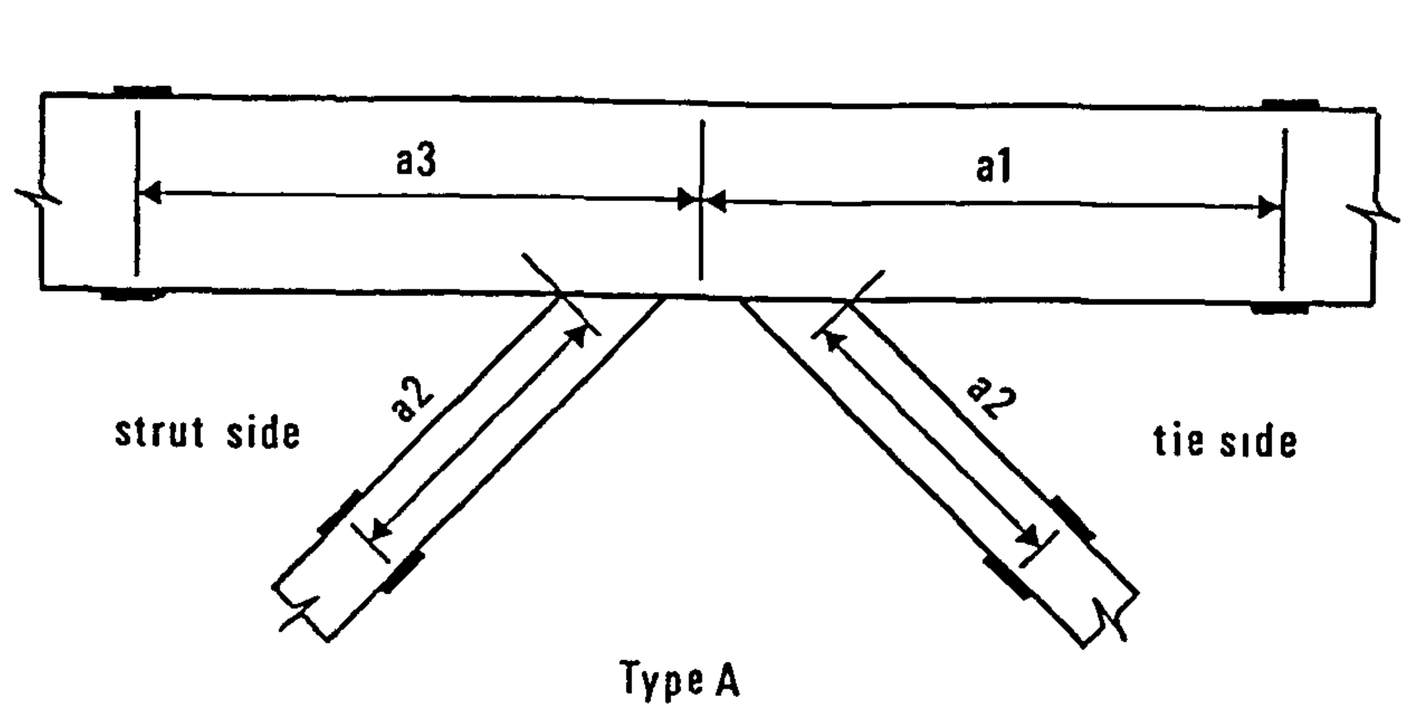

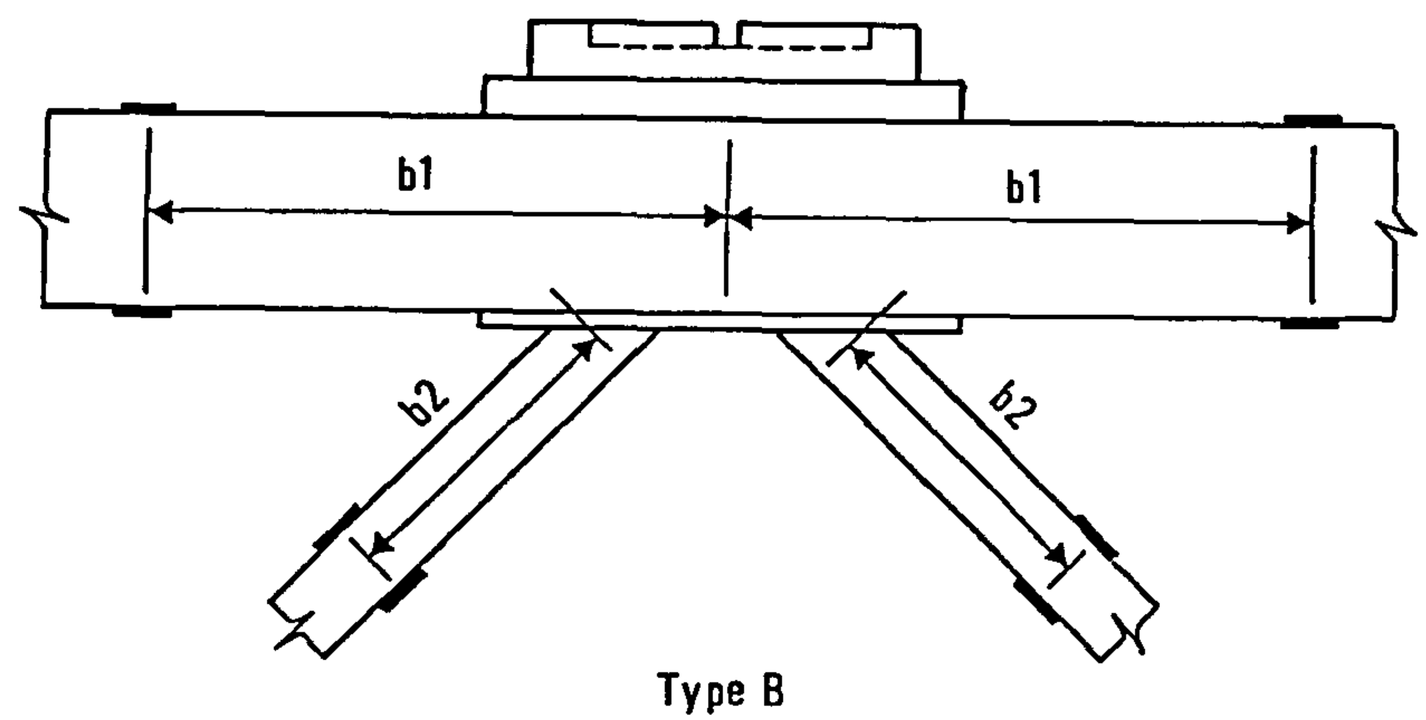

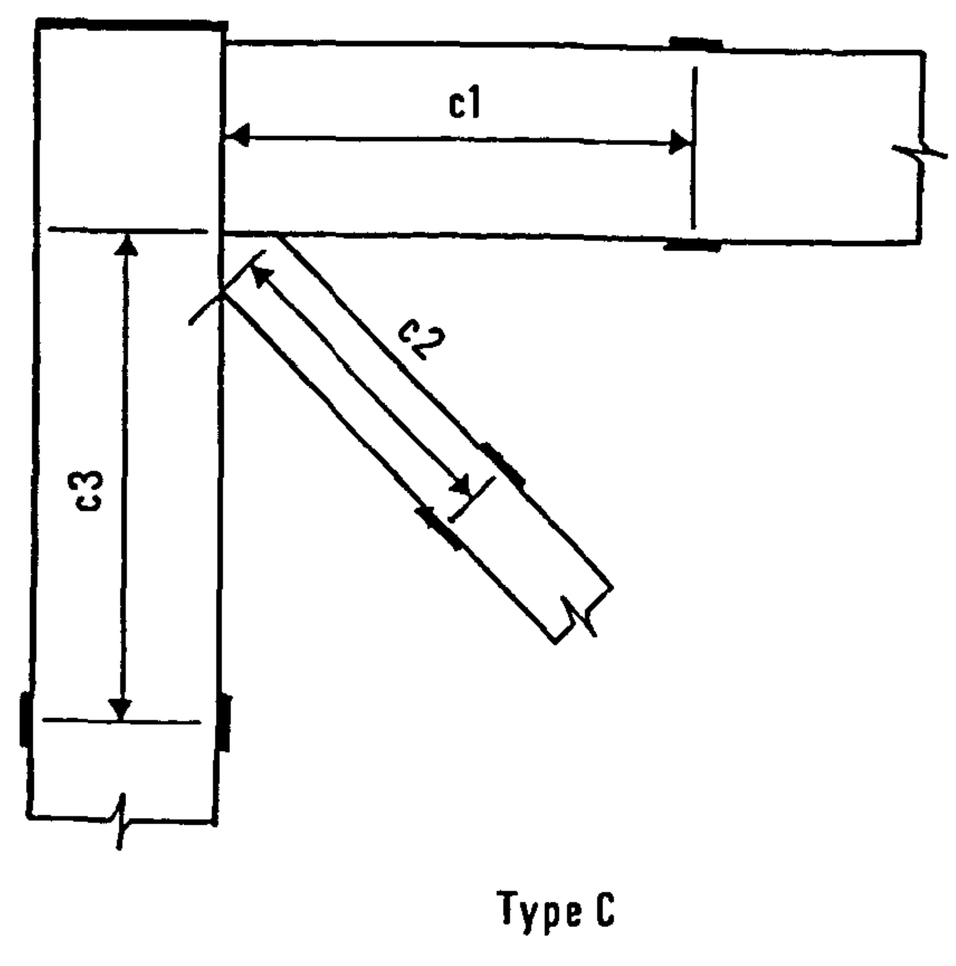

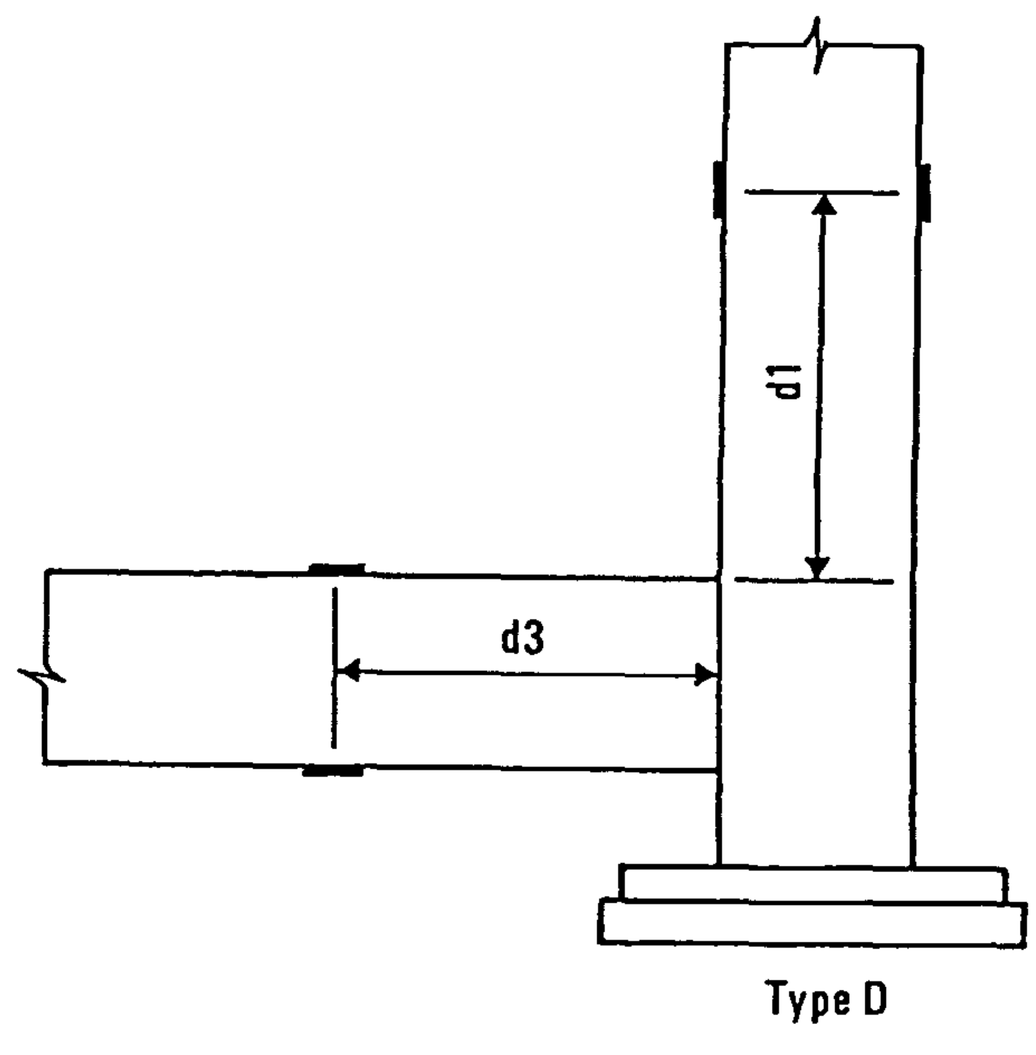

General Notes

1 dimension 2 is measured from heel of brace at intersection with chord

2 dimensions drawn to ℄ of strain gauge

3 1 of 4 drawings

4 for dimensions see table C1

Fig C1 Truss T1 : Strain gauge positions.

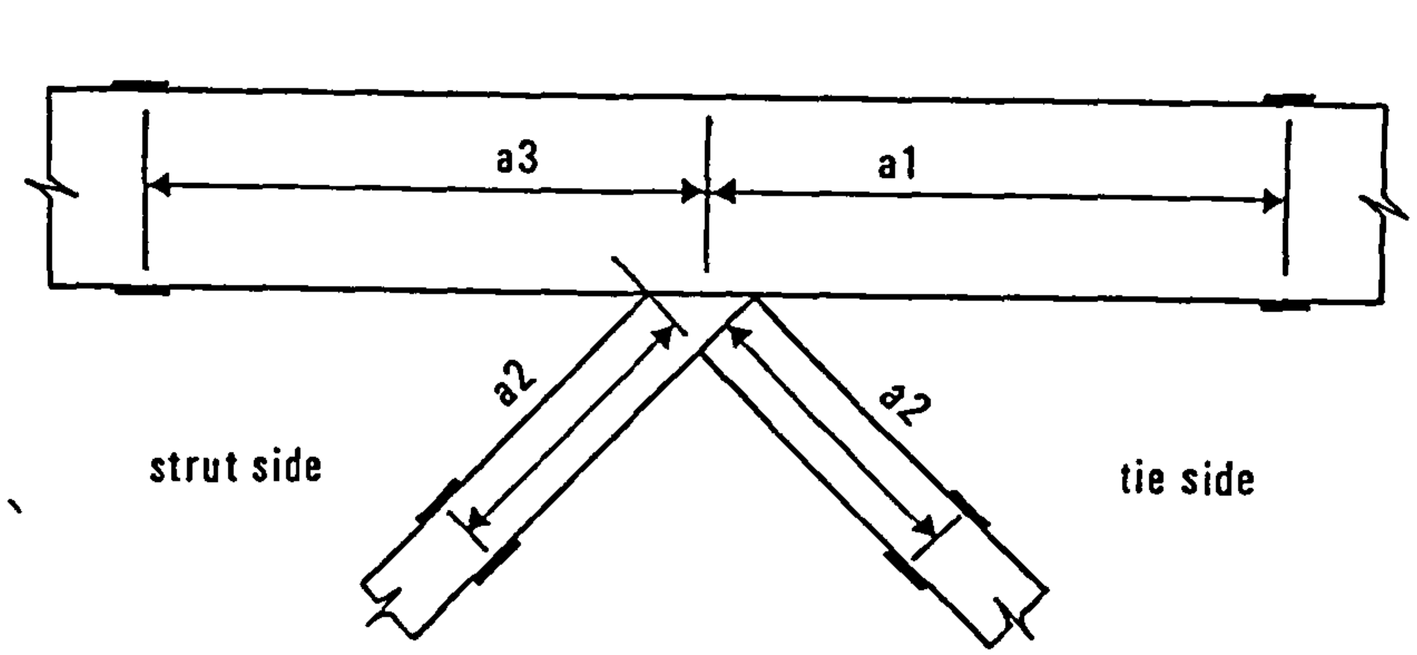

Type A

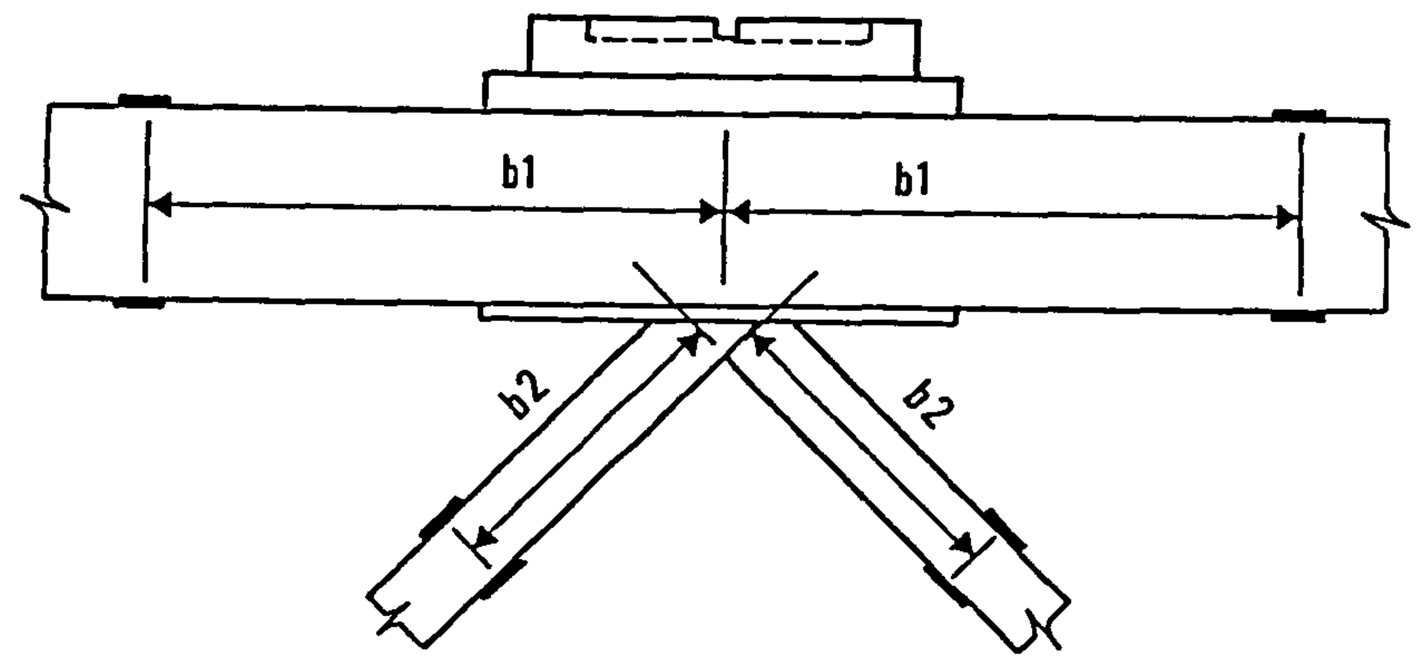

Type B

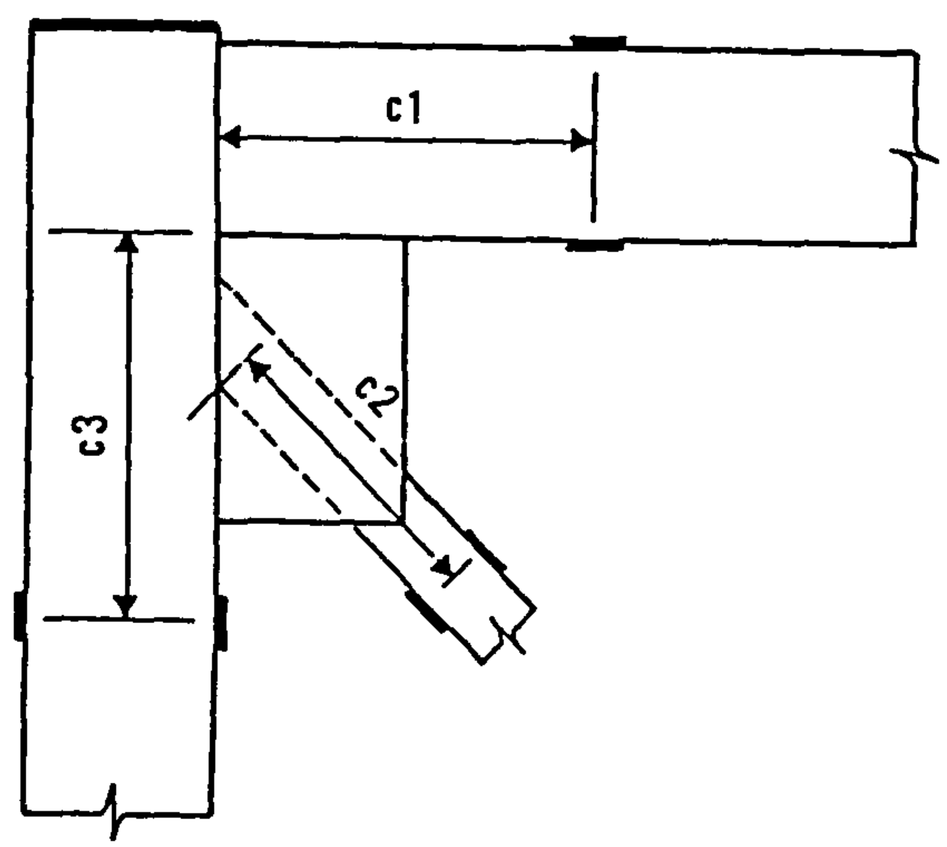

Type C

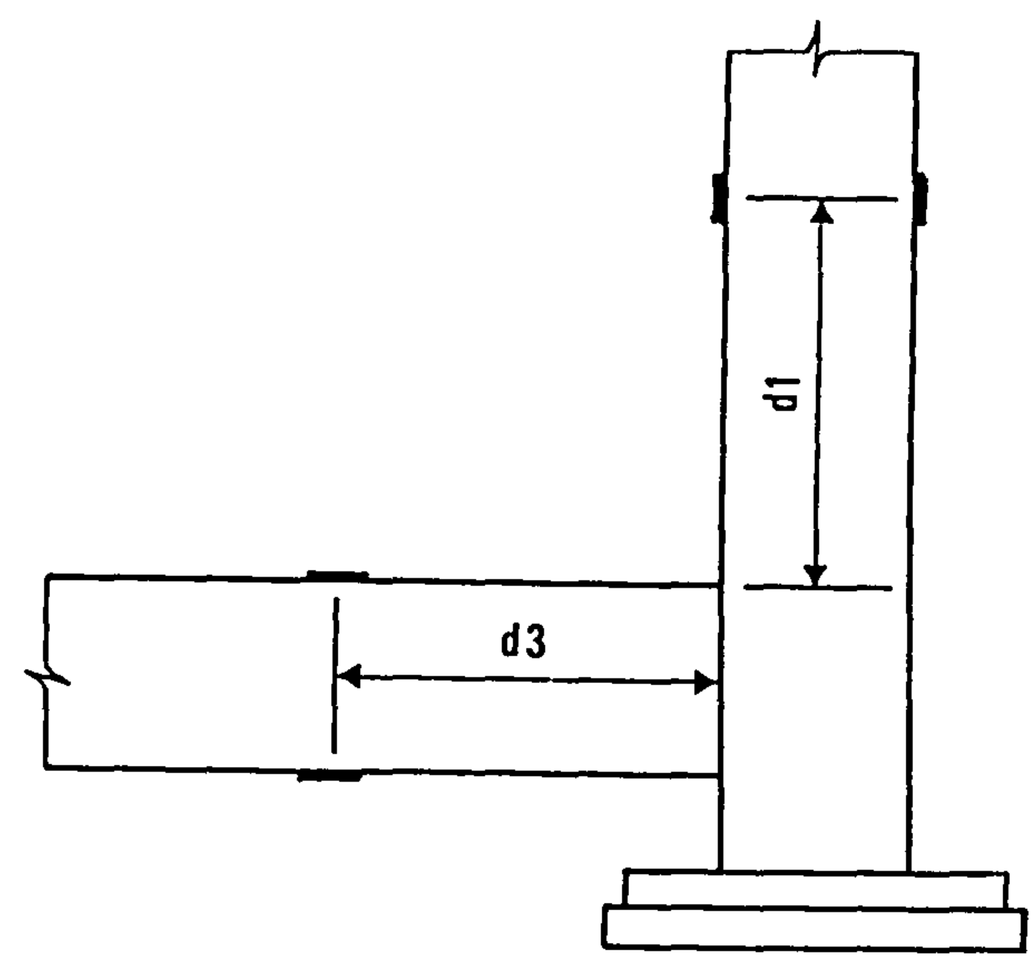

Type D

Notes

1 for dimensions see table C2

2 for general notes see fig C1

3 2 of 4 drawings

Fig C2 Truss T2 : Strain gauge positions.

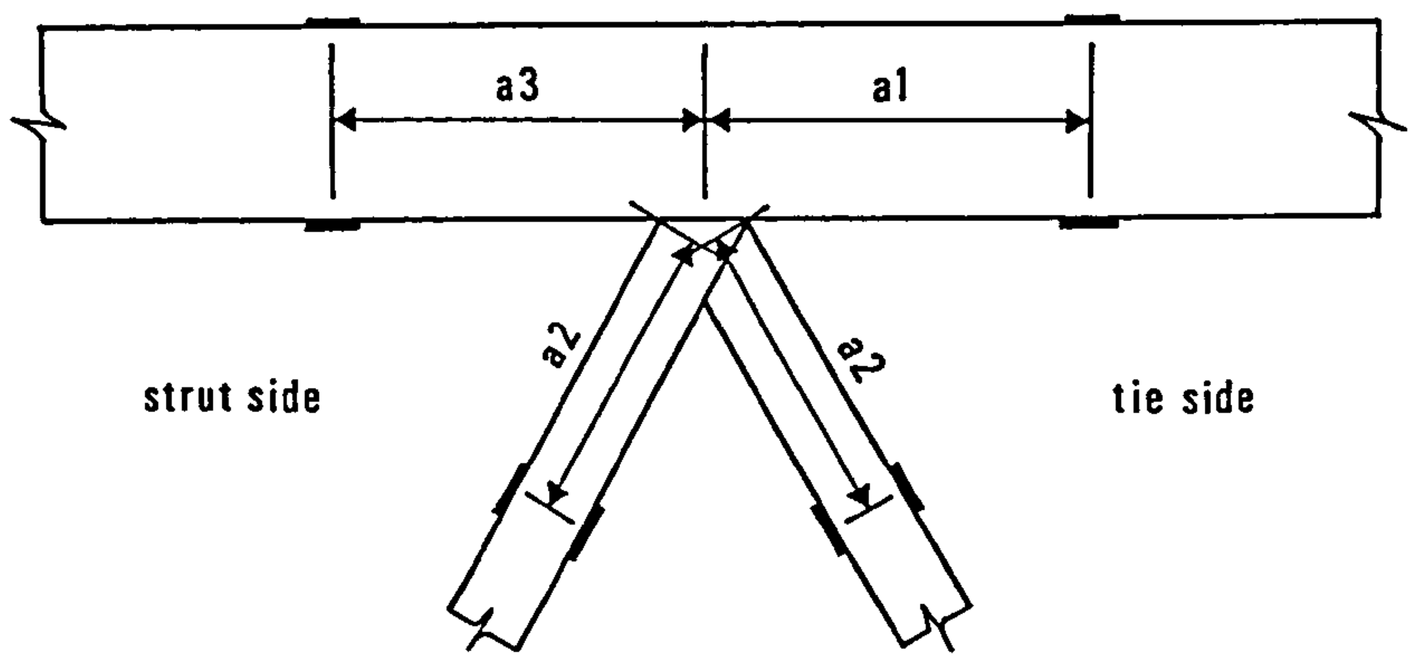

Type A

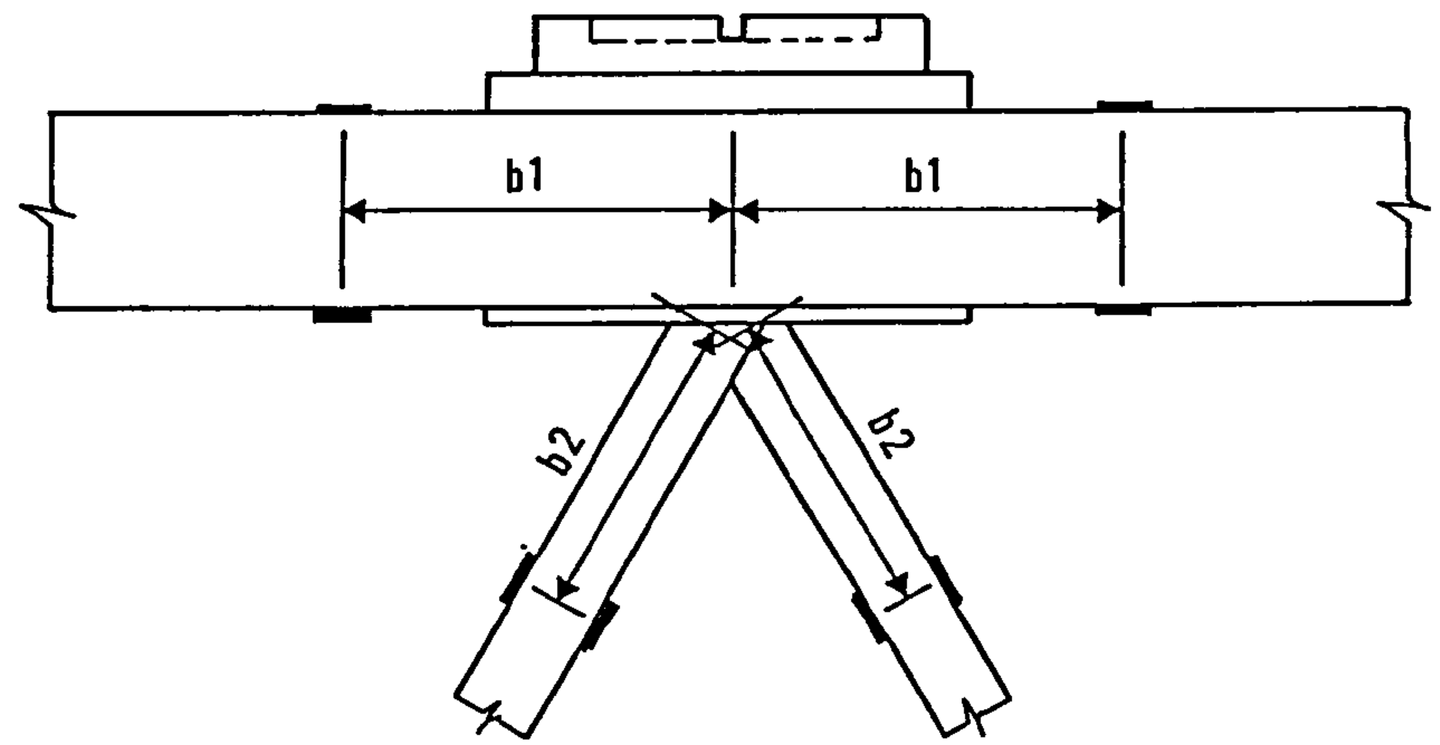

Type B

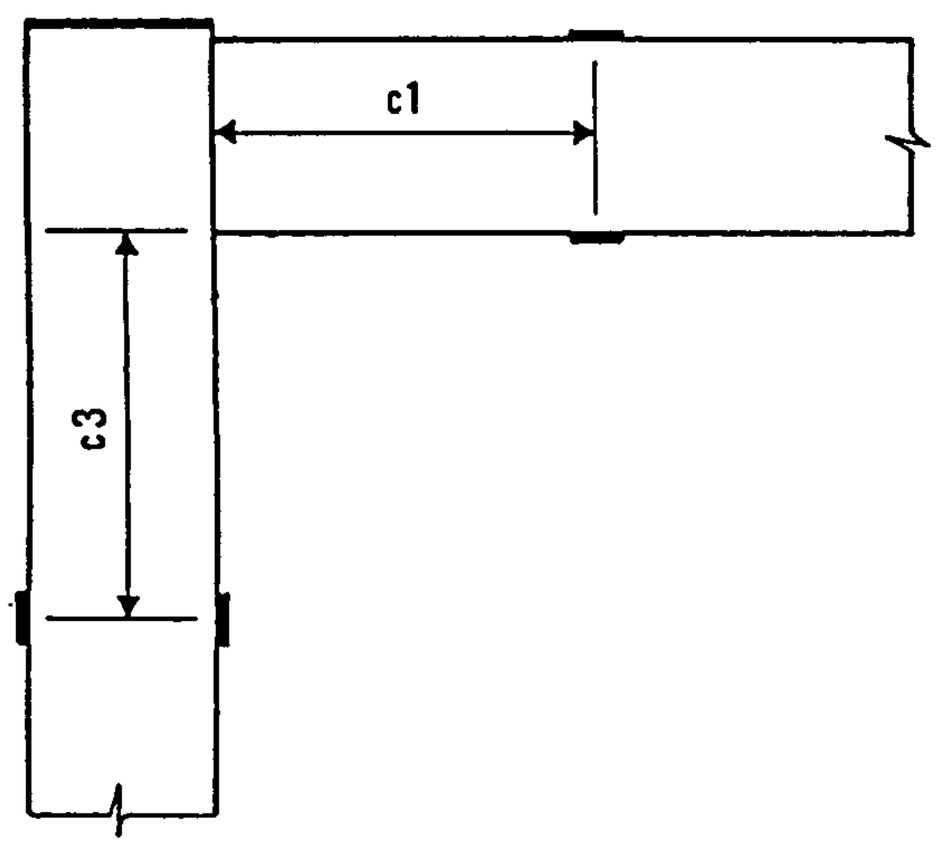

Type C

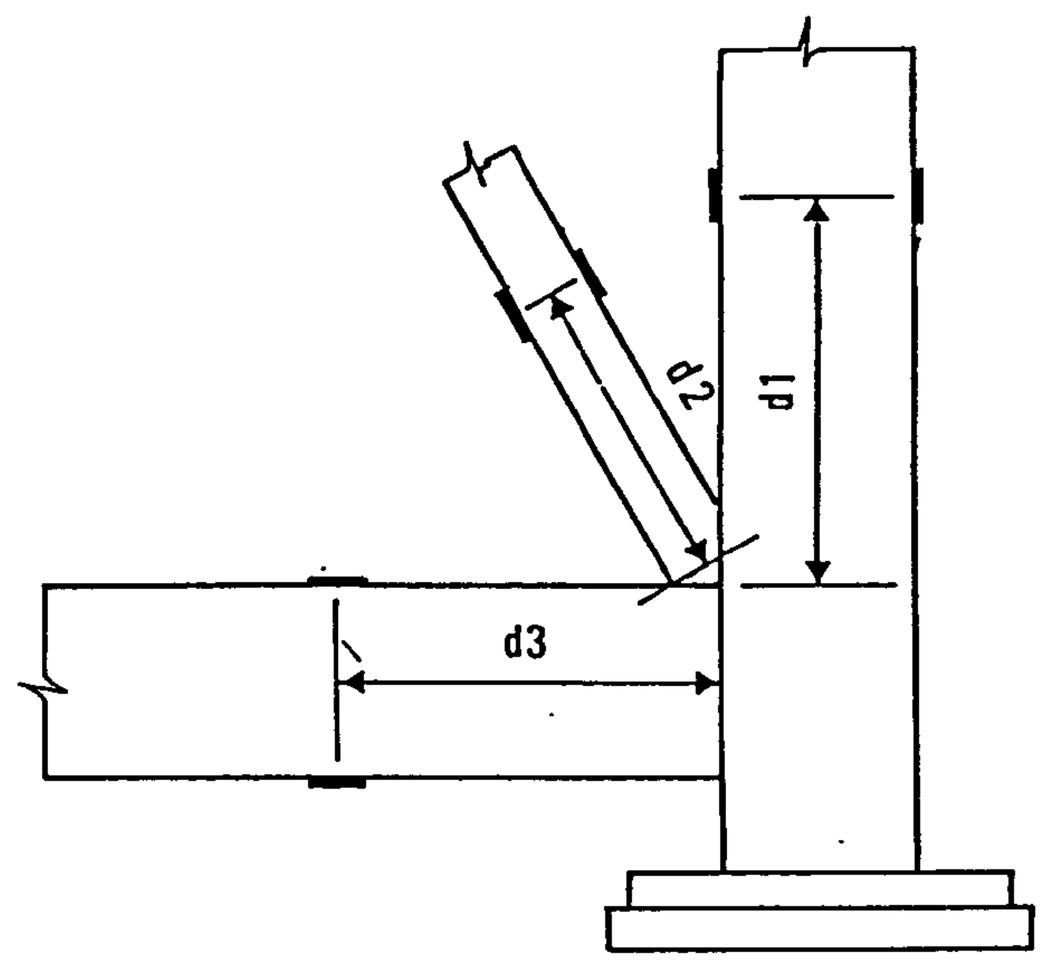

Type D

Notes

1 for dimensions see tables C3,C4 and C6

2 for general notes see fig C1

3 3 of 4 drawings

Fig C3 Trusses T3, T4, & T6 : Strain gauge positions.

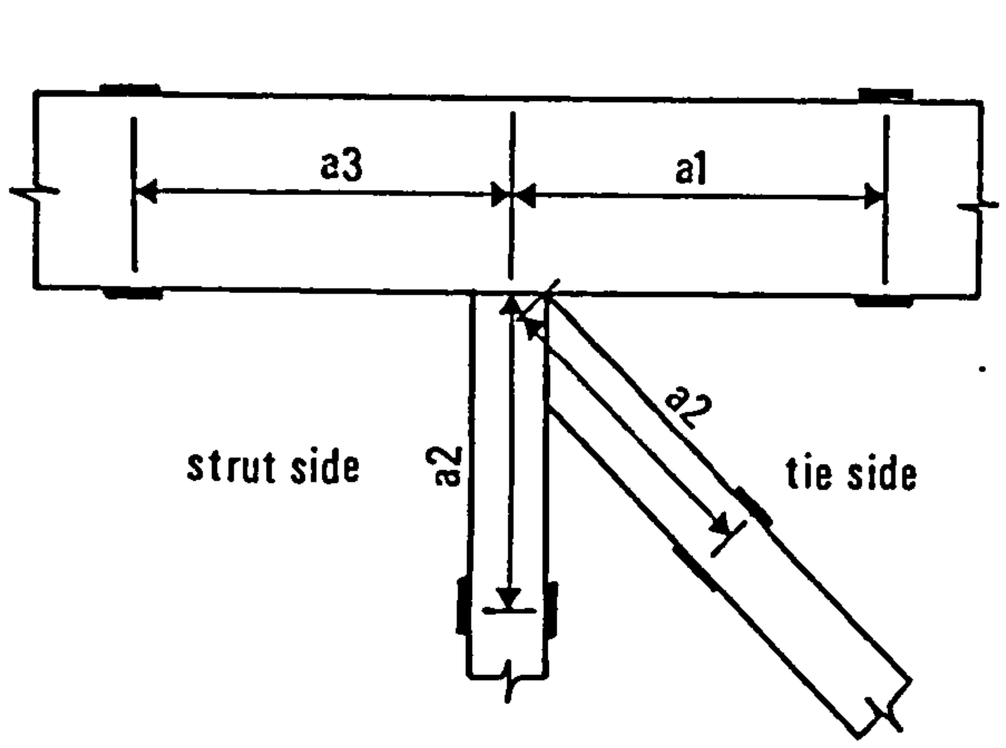

Type A

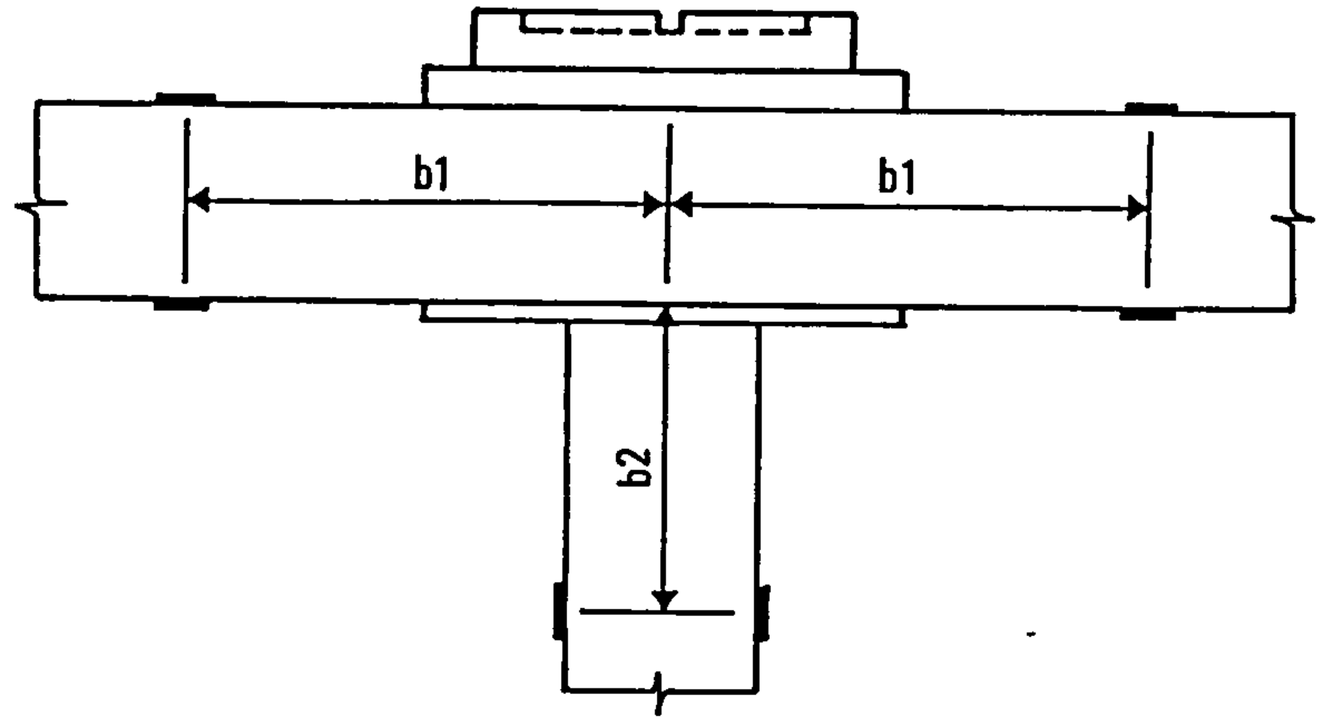

Type B

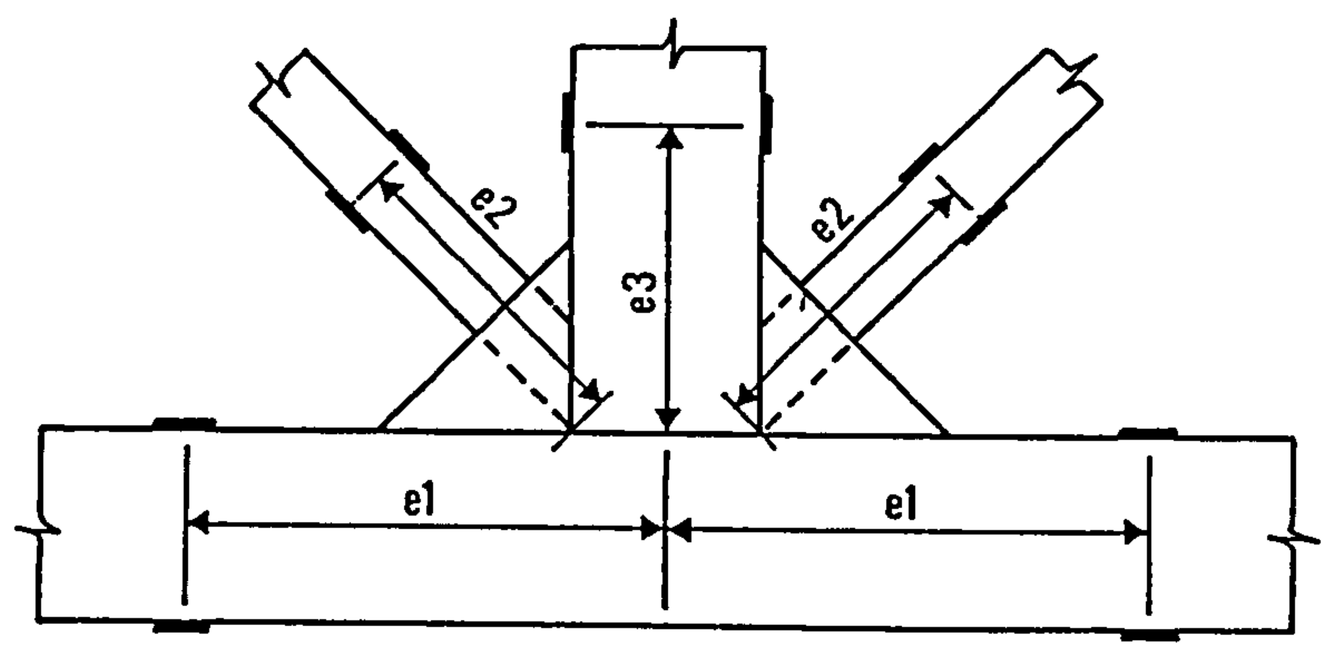

Type E

Notes

1 for types C and D see fig C1

2 for dimensions see table C5

3 for general notes see fig C1

4 4 of 4 drawings

Fig C4 Truss T5 : Strain gauge positions.

APPENDIX D

JOINT ULTIMATE STRENGTHS AND FAILURE MODES

Table D1 Measured joint axial forces and observed failure modes, at ram failure load for truss T1.

Ram failure load = 125 kN ; (load cycle = 1).

Joint	Measured member forces			Member efficiency			Failure mode (left blank if there was no evidence of failure) (refer to Fig 5.2)
	Chord	Strut	Tie	Chord	Strut	Tie	
	N_0 kN	N_1 kN	N_2 kN	$N_0/A_0.\sigma_{e0}$	$N_1/A_1.\sigma_{e1}$	$N_2/A_2.\sigma_{e2}$	
1	-397	-92	84	0.58	0.39	0.47	
2	-288	-79	86	0.61	0.38	0.54	
3	-175	-76	83	0.37	0.33	0.51	
4	493	-90	84	0.69	0.36	0.47	
5	369	-92	86	0.52	0.39	0.54	
6	235	-79	83	0.46	0.38	0.51	
7	119	-76	81	0.23	0.33	0.53	
8	-399	-94	86	0.58	0.40	0.48	
9	-271	-76	83	0.55	0.37	0.52	chord face plastification, local buckling of chord sidewalls; failure mode G4.
10	-178	-82	83	0.36	0.33	0.51	
11	493	-90	86	0.69	0.36	0.48	
12	351	-94	83	0.49	0.40	0.52	
13	241	-76	83	0.47	0.37	0.51	
14	120	-82	78	0.23	0.33	0.51	

Notes :
1) To be read in conjunction with Fig S2.
2) Measured member forces are indicated at ram failure load for the first failure cycle.
3) Member yielding has been defined as the occurrence of extreme fibre yielding at one or both of the strain gauges.
4) For strain gauge positions see Appendix C.

Table D2 Measured joint axial forces and observed failure modes, at ram failure load for truss T1 - (considering all load cycles).

Joint	Measured member forces			Member efficiency			Load cycle	Ram load	Failure mode (left blank if there was no evidence of failure) (refer to Fig 5.2)
	Chord	Strut	Tie	Chord	Strut	Tie			
	N_0 kN	N_1 kN	N_2 kN	$N_0/A_0.\sigma_{e0}$	$N_1/A_1.\sigma_{e1}$	$N_2/A_2.\sigma_{e2}$		kN	
1	-471	-99	98	0.69	0.42	0.54	3	145	G8
2	-314	-91	88	0.66	0.44	0.55	2	133	G4
3	-221	-97	115	0.47	0.42	0.71	5	158	G2b ; rupture of tension branch along the toe crosswall
4	570	-113	98	0.80	0.46	0.54	3	145	G1
5	492	-111	111	0.69	0.48	0.69	6	163	unfailed
6	307	-116	115	0.60	0.56	0.71	5	158	G1
7	150	-104	105	0.29	0.45	0.69	6	163	unfailed
8	-470	-97	95	0.69	0.42	0.53	3	145	G8
9	-271	-76	83	0.55	0.37	0.52	1	125	G4
10	-233	-109	116	0.47	0.44	0.71	6	163	G8
11	570	-115	95	0.80	0.46	0.53	3	145	G1
12	477	-120	119	0.67	0.52	0.74	6	163	G1
13	323	-116	116	0.63	0.56	0.71	6	163	G1
14	154	-109	106	0.30	0.44	0.70	6	163	G1

Notes :
1) To be read in conjunction with Fig S2.
2) Measured member forces are indicated at ram failure load.
3) Member yielding has been defined as the occurrence of extreme fibre yielding at one or both of the strain gauges.
4) For strain gauge positions see Appendix C.

Table D3 Measured joint axial forces and observed failure modes, at ram failure load for truss T2.

Ram failure load = 168 kN ; (load cycle = 1).

Joint	Measured member forces			Member efficiency			Failure mode (left blank if there was no evidence of failure)
	Chord	Strut	Tie	Chord	Strut	Tie	
	N_0 kN	N_1 kN	N_2 kN	$N_0/A_0.\sigma_{e0}$	$N_1/A_1.\sigma_{e1}$	$N_2/A_2.\sigma_{e2}$	
1	-522	-108	105	0.67	0.45	0.58	
2	-398	-110	112	0.82	0.53	0.70	
3	-238	-108	110	0.49	0.45	0.67	
4	651	-121	105	0.83	0.51	0.58	
5	483	-108	112	0.62	0.45	0.70	
6	321	-110	110	0.64	0.53	0.67	
7	160	-108	110	0.32	0.45	0.73	
8	-517	-110	101	0.66	0.47	0.56	
9	-407	-113	109	0.90	0.55	0.68	yielding and in-plane buckling of chord
10	-239	-113	107	0.53	0.46	0.65	
11	651	-123	101	0.83	0.50	0.56	
12	487	-110	109	0.62	0.47	0.68	yielding of tie
13	321	-113	107	0.64	0.55	0.65	
14	158	-113	107	0.31	0.46	0.71	yielding of tie

Notes :

1) To be read in conjunction with Fig S2.
2) Measured member forces are indicated at ram failure load for the first failure cycle.
3) Member yielding has been defined as the occurrence of extreme fibre yielding at one or both of the strain gauges.
4) For strain gauge positions see Appendix C.
5) For joints 1 - 7 the tie overlaps the strut.
6) For joints 8 - 14 the strut overlaps the tie.

Table D4 Measured joint axial forces and observed failure modes, at ram failure load for truss T2/2.

Ram failure load = 263 kN ; (load cycle = 1).

Joint	Measured member forces			Member efficiency			Failure mode
	Chord	Strut	Tie	Chord	Strut	Tie	(left blank if there was no evidence of failure)
	N_0 kN	N_1 kN	N_2 kN	$N_0/A_0.\sigma_{e0}$	$N_1/A_1.\sigma_{e1}$	$N_2/A_2.\sigma_{e2}$	
1	-349	-166	175	0.45	0.69	0.97	yielding of tie
4	485	-186	175	0.62	0.78	0.97	yielding of tie
5	241	-166	160	0.31	0.69	1.00	yielding of tie
8	-352	-179	162	0.45	0.76	0.90	yielding of strut
11	485	-198	162	0.62	0.80	0.90	yielding of both tie & strut
12	248	-179	160	0.32	0.76	1.00	yielding of strut

Notes :
1) To be read in conjunction with Fig S2.
2) Measured member forces are indicated at ram failure load for the first failure cycle.
3) Member yielding has been defined as the occurrence of extreme fibre yielding at one or both of the strain gauges.
4) For strain gauge positions see Appendix C.
5) For joints 1, 4, 5 the tie overlaps the strut.
6) For joints 8, 11, 12 the strut overlaps the tie.

Table D5 Measured joint axial forces and observed failure modes, at ram failure load for truss T3.

Ram failure load = 380 kN ; (load cycle = 1).

Joint	Measured member forces			Member efficiency			Failure mode
	Chord	Strut	Tie	Chord	Strut	Tie	(left blank if there was no evidence of failure)
	N_0 kN	N_1 kN	N_2 kN	$N_0/A_0.\sigma_{e0}$	$N_1/A_1.\sigma_{e1}$	$N_2/A_2.\sigma_{e2}$	
1	-320	-184	144	0.47	0.79	0.75	
2	-179	-172	192	0.26	0.73	1.00	yielding of tie
3	395	-169	144	0.58	0.72	0.75	
4	258	-184	192	0.38	0.79	1.00	yielding of tie
5	-314	-184	150	0.46	0.78	0.78	
6	-180	-175	192	0.26	0.75	1.00	yielding of tie
7	395	-177	150	0.58	0.75	0.78	
8	254	-184	192	0.37	0.78	1.00	yielding of tie

Notes :

1) To be read in conjunction with Fig S2.
2) Measured member forces are indicated at ram failure load for the first failure cycle.
3) Member yielding has been defined as the occurrence of extreme fibre yielding at one or both of the strain gauges.
4) For strain gauge positions see Appendix C.
5) For joints 1 - 4 the tie overlaps the strut.
6) For joints 5 - 8 the strut overlaps the tie.

Table D6 Measured joint axial forces and observed failure modes, at ram failure load for truss T4.

Ram failure load = 475 kN ; (load cycle = 1).

Joint	Measured member forces			Member efficiency			Failure mode
	Chord	Strut	Tie	Chord	Strut	Tie	(left blank if there was no evidence of failure)
	N_0 kN	N_1 kN	N_2 kN	$N_0/A_0.\sigma_{e0}$	$N_1/A_1.\sigma_{e1}$	$N_2/A_2.\sigma_{e2}$	
1	-362	-211	182	0.54	0.88	0.76	yielding of tie & strut
2	-209	-202	193	0.31	0.84	0.81	yielding of tie & strut
3	466	-226	182	0.70	0.94	0.76	yielding of tie & strut; yielding of chord on strut side in-plane single curvature buckling of strut
4	310	-211	193	0.46	0.88	0.81	yielding of tie & strut
5	-362	-218	190	0.54	0.91	0.79	yielding of strut
6	-219	-212	221	0.33	0.89	0.93	yielding of tie & strut
7	466	-222	190	0.70	0.93	0.79	yielding of tie & strut; yielding of chord; in-plane single curvature buckling of strut
8	313	-218	221	0.47	0.91	0.93	yielding of tie & strut

Notes :

1) To be read in conjunction with Fig S2.
2) Measured member forces are indicated at ram failure load for the first failure cycle.
3) Member yielding has been defined as the occurrence of extreme fibre yielding at one or both of the strain gauges.
4) For strain gauge positions see Appendix C.
5) For joints 1 - 4 the tie overlaps the strut.
6) For joints 5 - 8 the strut overlaps the tie.

Table D7 Measured joint axial forces and observed failure modes, at ram failure load for truss T5.

Ram failure load = 330 kN ; (load cycle = 1).

Joint	Measured member forces			Member efficiency			Failure mode
	Chord	Strut	Tie	Chord	Strut	Tie	(left blank if there was no evidence of failure)
	N_0 kN	N_1 kN	N_2 kN	$N_0/A_0.\sigma_{e0}$	$N_1/A_1.\sigma_{e1}$	$N_2/A_2.\sigma_{e2}$	
1	-399	-125	200	0.55	0.53	0.94	yielding of tie
2	-288	-127	192	0.40	0.54	0.90	yielding of tie with rupture on heel face above the line of the weld with chord.
3	289	-125	192	0.40	0.53	0.90	yielding of tie
4	164	-127	202	0.23	0.54	0.95	yielding of tie
5	-380	-119	166	0.52	0.62	0.86	yielding of tie; yielding of chord on tie side of joint
6	-293	-131	192	0.40	0.56	1.00	yielding of tie
7	294	-119	192	0.41	0.62	1.00	yielding of tie
8	155	-131	187	0.21	0.56	0.97	yielding of tie

Notes :
1) To be read in conjunction with Fig S2.
2) Measured member forces are indicated at ram failure load for the first failure cycle.
3) Member yielding has been defined as the occurrence of extreme fibre yielding at one or both of the strain gauges.
4) For strain gauge positions see Appendix C.
5) For joints 1 - 4 the tie overlaps the strut.
6) For joints 5 - 8 the strut overlaps the tie.

Table D8 Measured joint axial forces and observed failure modes, at ram failure load for truss T6.

Ram failure load = 560 kN ; (load cycle = 1).

Joint	Measured member forces			Member efficiency			Failure mode
	Chord	Strut	Tie	Chord	Strut	Tie	(left blank if there was no evidence of failure)
	N_0 kN	N_1 kN	N_2 kN	$N_0/A_0.\sigma_{e0}$	$N_1/A_1.\sigma_{e1}$	$N_2/A_2.\sigma_{e2}$	(refer to Fig 5.3)
1	-648	-224	207	0.52	0.77	0.71	yielding of tie ; strut local buckling of toe and heel faces (L6), but no yielding at gauge positions
2	-443	-217	202	0.35	0.74	0.81	yielding of tie, with rupture of heel and sidewall faces
3	-252	-209	189	0.20	0.72	0.76	similar to joint 1
4	744	-257	207	0.59	0.88	0.71	yielding of tie ; yielding of strut ; strut local buckling of toe and heel faces (L6);
5	582	-224	202	0.46	0.77	0.81	similar to joint 1
6	361	-217	189	0.29	0.74	0.76	strut local buckling of toe face only (L6), but no yielding at gauge positions
7	-642	-239	201	0.51	0.82	0.69	strut local buckling of heel face only (L6)
8	-483	-220	223	0.39	0.76	0.77	similar to joint 7
9	-280	-218	218	0.22	0.75	0.75	similar to joint 7
10	744	-251	201	0.59	0.86	0.69	similar to joint 7
11	572	-239	223	0.46	0.82	0.77	similar to joint 7
12	355	-220	218	0.28	0.76	0.75	similar to joint 7

Notes :
1) To be read in conjunction with Fig S2.
2) Measured member forces are indicated at ram failure load for the first failure cycle.
3) Member yielding has been defined as the occurrence of extreme fibre yielding at one or both of the strain gauges.
4) For strain gauge positions see Appendix C.
5) For joints 1 - 6 the tie overlaps the strut.
6) For joints 7 - 12 the strut overlaps the tie.

Table D9 Centre joints : measured axial forces and observed failure modes, at ram failure load for trusses T1, T2, T2/2, T3, T4 & T6.

Truss	Ram Load kN	Joint	Member forces Chord N_0 kN	Member forces Strut N_1 kN	Member efficiency Chord $N_0/A_0.\sigma_{e0}$	Member efficiency Strut $N_1/A_1.\sigma_{e1}$	Failure Mode (left blank if there was no evidence of failure)
T1	125	15	-397(13)	-91(25)	0.58	0.37	
			-399(14)	-84(26)	0.58	0.34	
T2	168	15	-522(13)	-121(25)	0.67	0.50	
			-517(14)	-123(26)	0.66	0.50	
T2/2	263	15	-349(7)	-186(13)	0.45	0.78	yielding of chord ; yielding of both struts
			-352(8)	-198(14)	0.45	0.80	
T3	380	9	-320(8)	-169(16)	0.47	0.72	yielding of chord ; chord local buckling on both sides of ram
			-314(9)	-177(17)	0.46	0.76	
T4	475	9	-362(8)	-226(16)	0.54	0.95	yielding of chord ; chord local buckling on both sides of ram ; yielding of both struts ; in-plane single curvature buckling of both struts
			-362(9)	-222(17)	0.54	0.93	
T6	560	13	-648(11)	-257(22)	0.52	0.88	yielding of chord ; chord local buckling on both sides of ram ; yielding of both struts
			-642(12)	-251(23)	0.51	0.86	

Notes :
1) To be read in conjunction with Figs S1 and S2.
2) Measured member forces are indicated at ram failure load for the first failure cycle.
3) Member yielding has been defined as the occurrence of extreme fibre yielding at one or both of the strain gauges.
4) For strain gauge positions see Appendix C.
5) Where necessary member numbers are shown in brackets.

Table D10 Centre joints : measured axial forces and observed failure modes, at ram failure load for truss T5.

Truss	Ram Load	Joint	Member forces			Member efficiency			Failure Mode (left blank if there was no evidence of failure)
			Chord	Tie	Post	Chord	Tie	Post	
			N_0	N_2	N_3	$N_0/A_0.\sigma_{e0}$	$N_2/A_2.\sigma_{e2}$	$N_3/A_3.\sigma_{e3}$	
	kN		kN	kN	kN				
T5	330	9	-399(9)		-306	0.55		0.42	
			-380(10)			0.52			
		14	289(3)	200(17)	-306	0.40	0.85	0.42	yielding of chord ; yielding of tie member 17
			294(4)	166(18)		0.41	0.86		

Notes :

1) To be read in conjunction with Figs S1 and S2.
2) Measured member forces are indicated at ram failure load for the first failure cycle.
3) Member yielding has been defined as the occurrence of extreme fibre yielding at one or both of the strain gauges.
4) For strain gauge positions see Appendix C.
5) Where necessary member numbers are shown in brackets.

Table D11 Corner joints : measured axial forces and observed failure modes, at ram failure load for trusses T1, T2, T2/2 & T5.

Truss	Ram Load kN	Joint	Member forces Chord N_0 kN	Tie N_2 kN	Post N_3 kN	Member efficiency Chord $N_0/A_0.\sigma_{e0}$	Tie $N_2/A_2.\sigma_{e2}$	Post $N_3/A_3.\sigma_{e3}$	Failure Mode (left blank if there was no evidence of failure)
T1	125	16	-64	81	-66	0.14	0.53	0.15	
		17	-4		-66	0.01		0.15	
		18	-64	78	-64	0.13	0.51	0.15	
		19	-4		-64	0.01		0.15	
T2	168	16	-76	110	-85	0.16	0.72	0.19	
17			5		-85	0.01		0.19	
18			-76	107	-83	0.17	0.70	0.19	
19			6		-83	0.01	0.19		
T2/2	263	16			Strain readings - unreliable				yielding of tie
17					Strain readings - unreliable				
18					Strain readings - unreliable				yielding of tie
19					Strain readings - unreliable				
T5	330	10	-166	202	-157	0.23	0.95	0.22	yielding of tie
		11	28		-157	0.04		0.22	
		12	-161	187	-149	0.22	0.97	0.21	yielding of tie
		13	24		-149	0.03		0.21	

Notes :
1) To be read in conjunction with Fig S2.
2) Measured member forces are indicated at ram failure load for the first failure cycle.
3) Member yielding has been defined as the occurrence of extreme fibre yielding at one or both of the strain gauges.
4) For strain gauge positions see Appendix C.

Table D12 Corner joints : measured axial forces and observed failure modes, at ram failure load for trusses T3, T4, & T6.

Truss	Ram Load	Joint	Member forces Chord	Strut	Post	Member efficiency Chord	Strut	Post	Failure Mode (left blank if there was no evidence of failure)
			N_0	N_1	N_3	$N_0/A_0.\sigma_{e0}$	$N_1/A_1.\sigma_{e1}$	$N_3/A_3.\sigma_{e3}$	
	kN		kN	kN	kN				
T3	380	10	-27	-13	0.00	0.02			
	11	102	-172	-13	0.15	0.74	0.02		
	12	-21		-16	0.03	0.02			
	13	98	-175	-16	0.14	0.75	0.02		
T4	475	10	-20		-13	0.03		0.02	yielding of strut
		11	131	-202	-13	0.20	0.85	0.02	
		12	-22		-15	0.03		0.02	yielding of strut
		13	126	-212	-15	0.19	0.89	0.02	
T6	560	14	12		-53	0.01		0.04	
		15	183	-209	-53	0.15	0.72	0.04	
		16	7		57	0.01		0.05	
		17	190	-218	57	0.15	0.75	0.05	

Notes :
1) To be read in conjunction with Fig S2.
2) Measured member forces are indicated at ram failure load for the first failure cycle.
3) Member yielding has been defined as the occurrence of extreme fibre yielding at one or both of the strain gauges.
4) For strain gauge positions see Appendix C.

APPENDIX E

STRESS DISTRIBUTION DIAGRAMS FOR TRUSS JOINTS

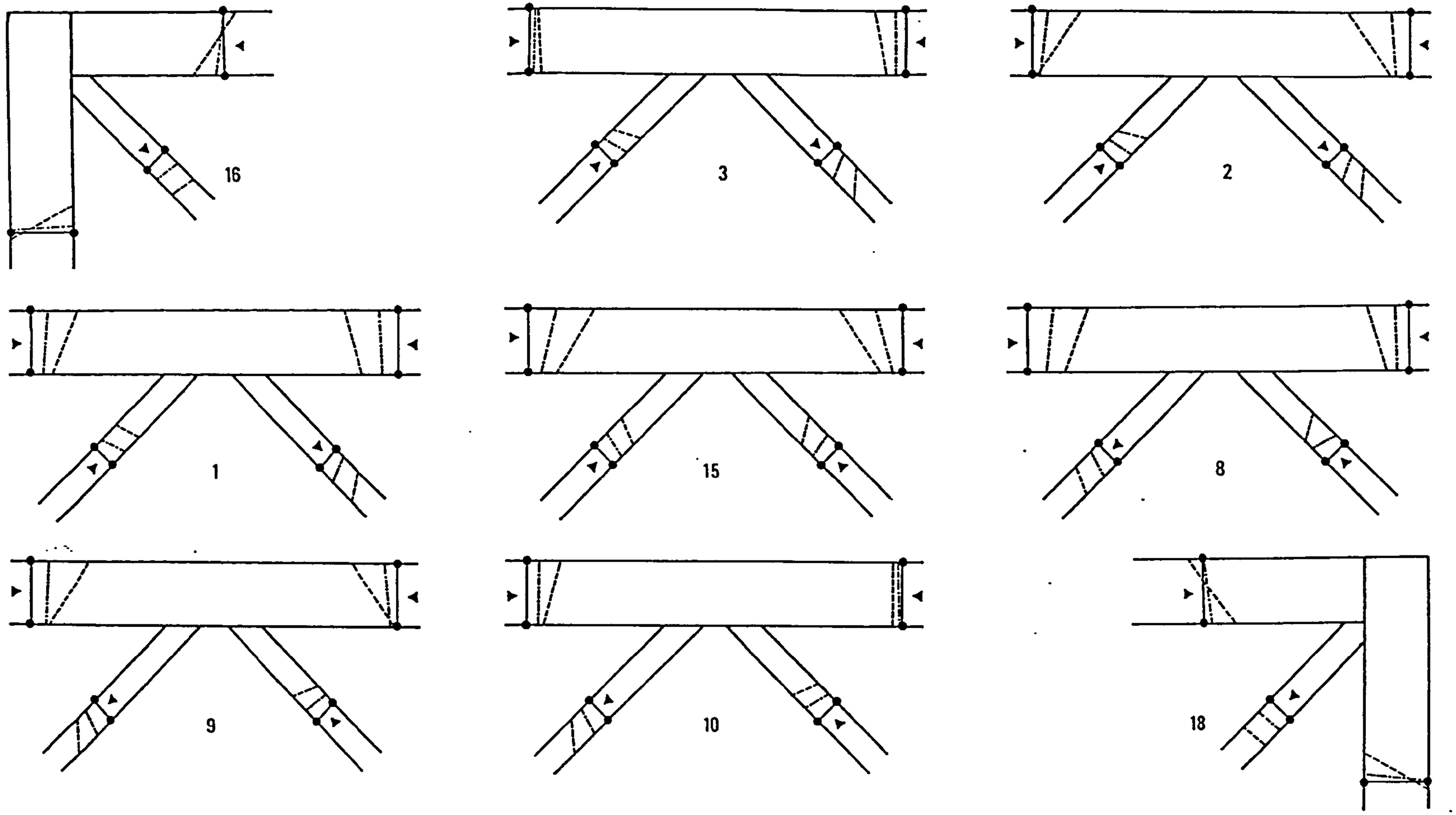

Notes

1 Elastic distribution is plotted at ram load of 50 kN : Ultimate ram load = 125 kN

2 Yield = ≫

3 Scale ⊢⟷⊣ 200 Nmm^{-2}

Key

—·—·— Elastic

– – – – Ultimate

Fig E1(a) Truss T1 : Stress distribution at strain gauge positions in the elastic range and at truss ultimate load.

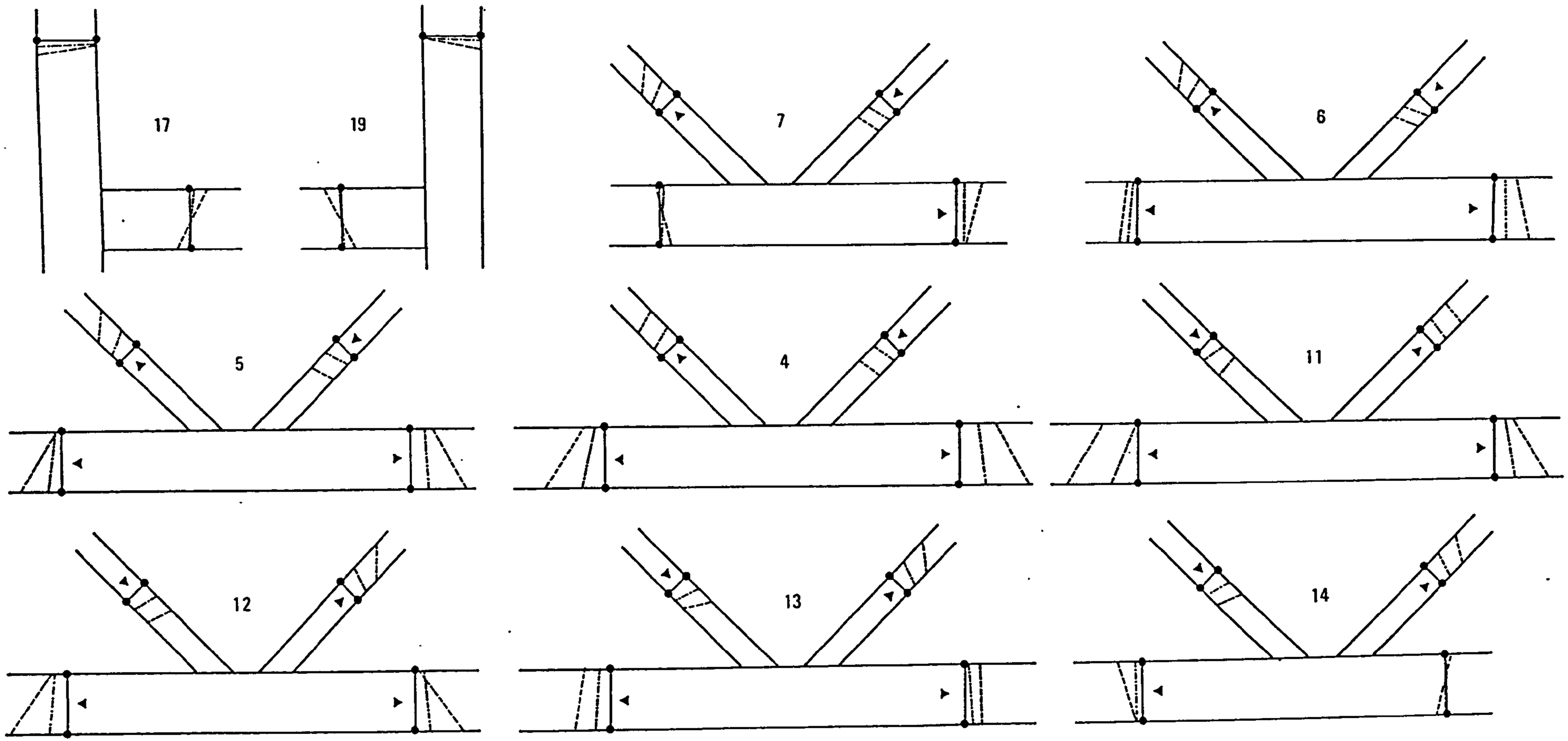

Notes

1 Elastic distribution is plotted at ram load of 50 kN : Ultimate ram load = 125 kN

2 Yield = ≫

3 Scale ⊢⟷⊣ 200 Nmm^{-2}

Key

-·-·-·- Elastic

- - - - Ultimate

Fig E1(b) Truss T1 : Stress distribution at strain gauge positions in the elastic range and at truss ultimate load.

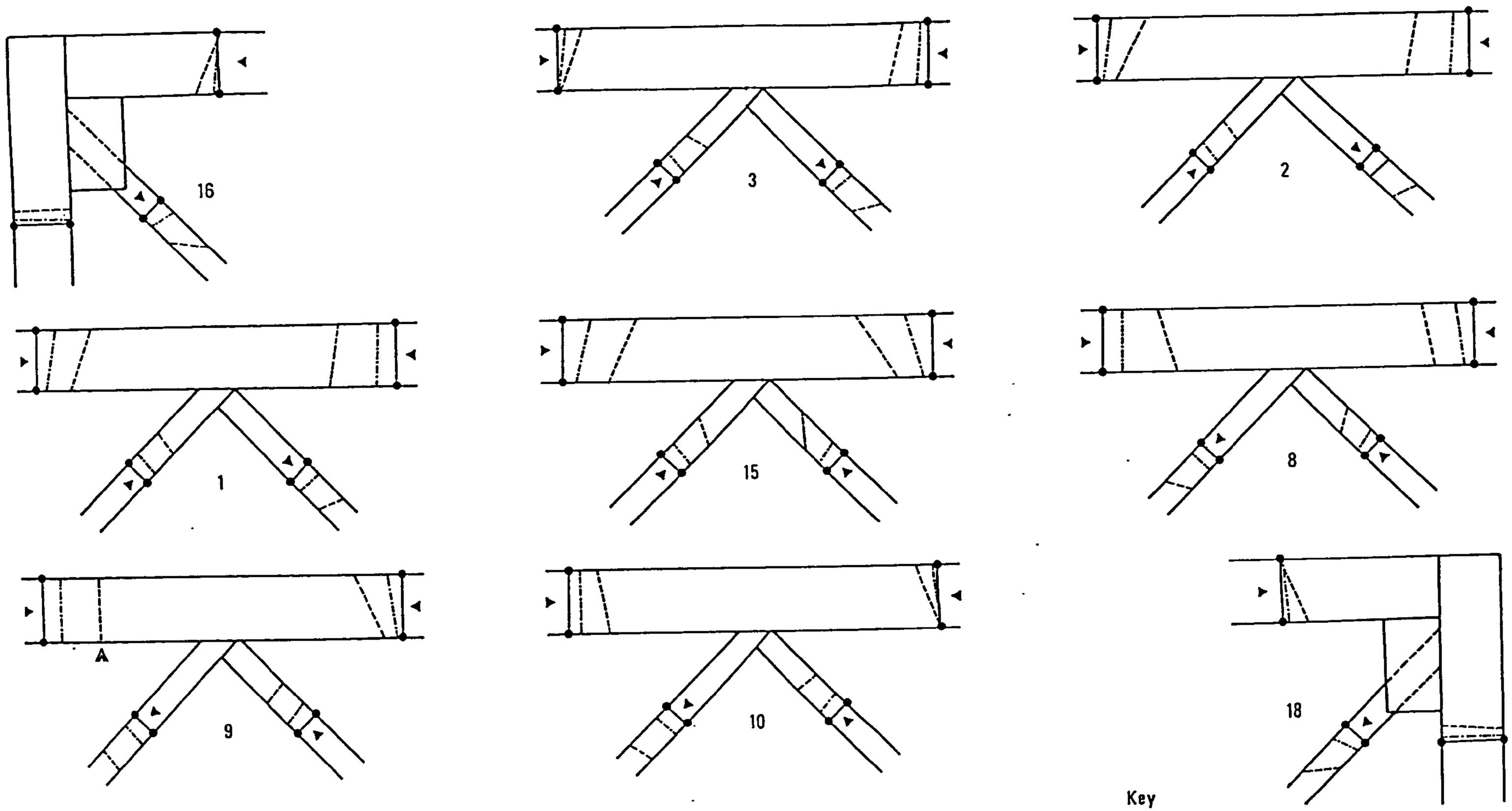

Notes

1 Elastic distribution is plotted at ram load of 50 kN : Ultimate ram load = 168 kN

2 Yield = ≫

3 Scale ⟷ 200 Nmm^{-2}

Key

-·-·-·- Elastic

- - - - - Ultimate

Fig E2(a) Truss T2 : Stress distribution at strain gauge positions in the elastic range and at truss ultimate load.

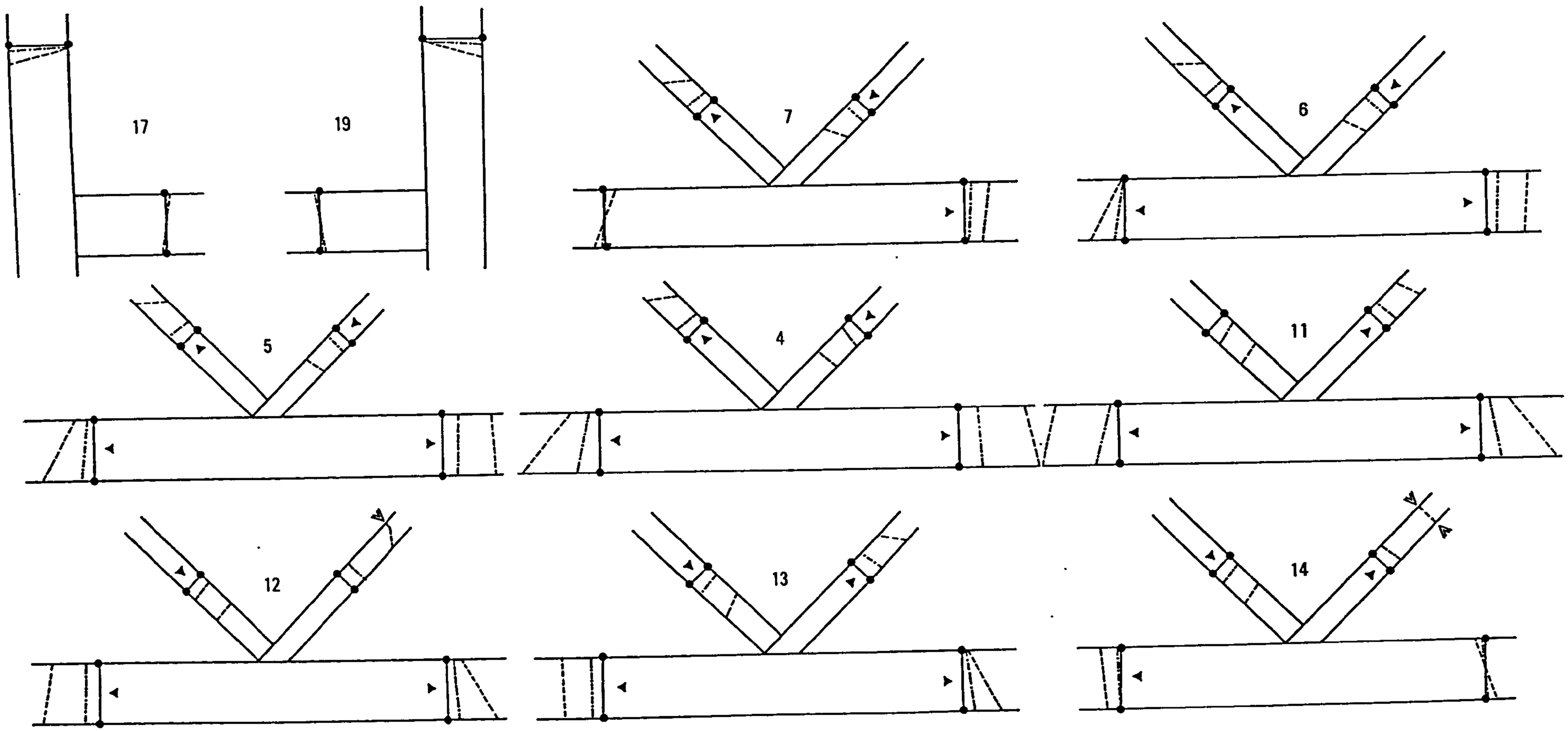

Notes

1 Elastic distribution is plotted at ram load of 50 kN : Ultimate ram load = 168 kN

2 Yield = ⋗

3 Scale ⟷ 200 Nmm^{-2}

Key

—·—·— Elastic

– – – – Ultimate

Fig E2(b) Truss T2 : Stress distribution at strain gauge positions in the elastic range and at truss ultimate load.

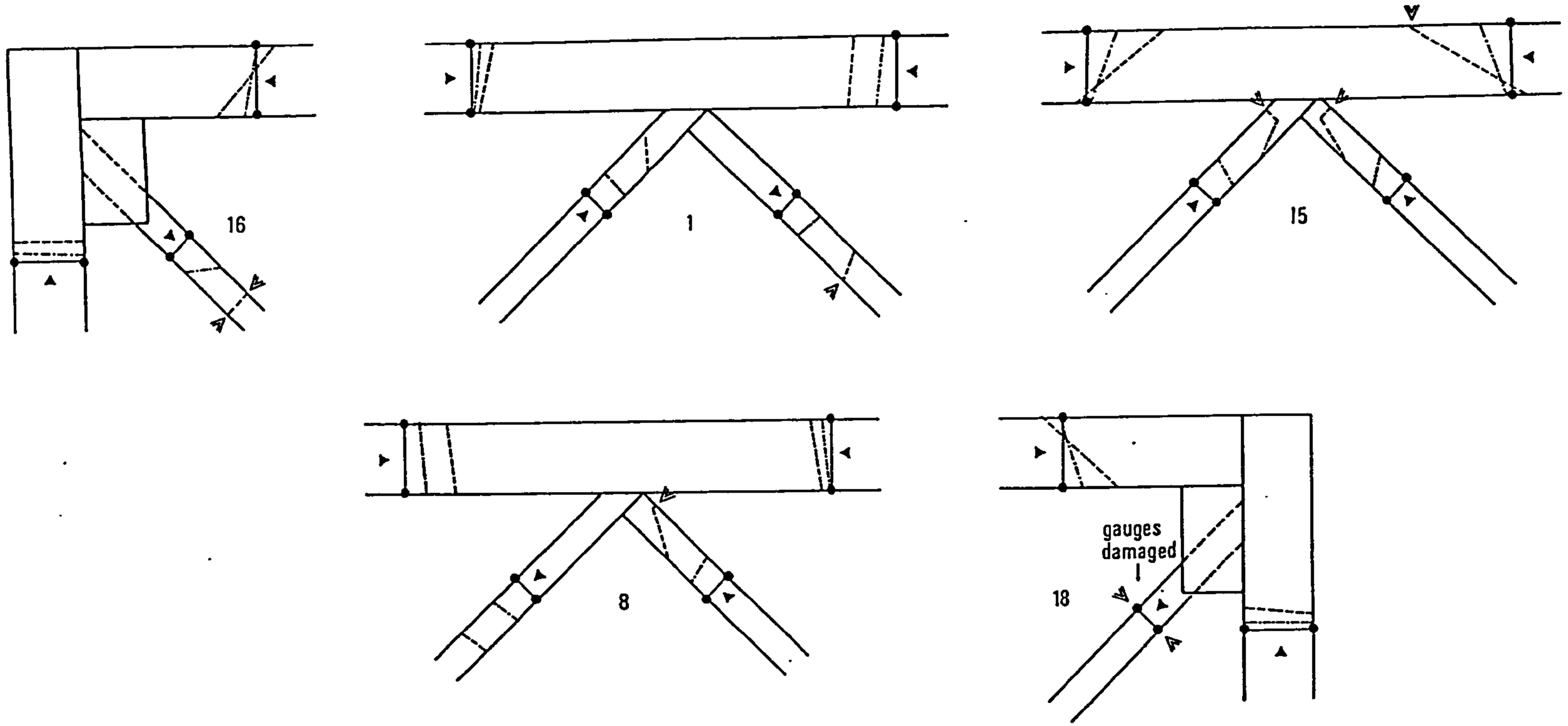

Notes

1 Elastic distribution is plotted at ram load of 100 kN : Ultimate ram load = 263 kN

2 Yield = ⋗

3 Scale ⊢⟷⊣ 200 Nmm^{-2}

Key

—·—·— Elastic

– – – – Ultimate

Fig E3(a) Truss T2/2 : Stress distribution at strain gauge positions in the elastic range and at truss ultimate load.

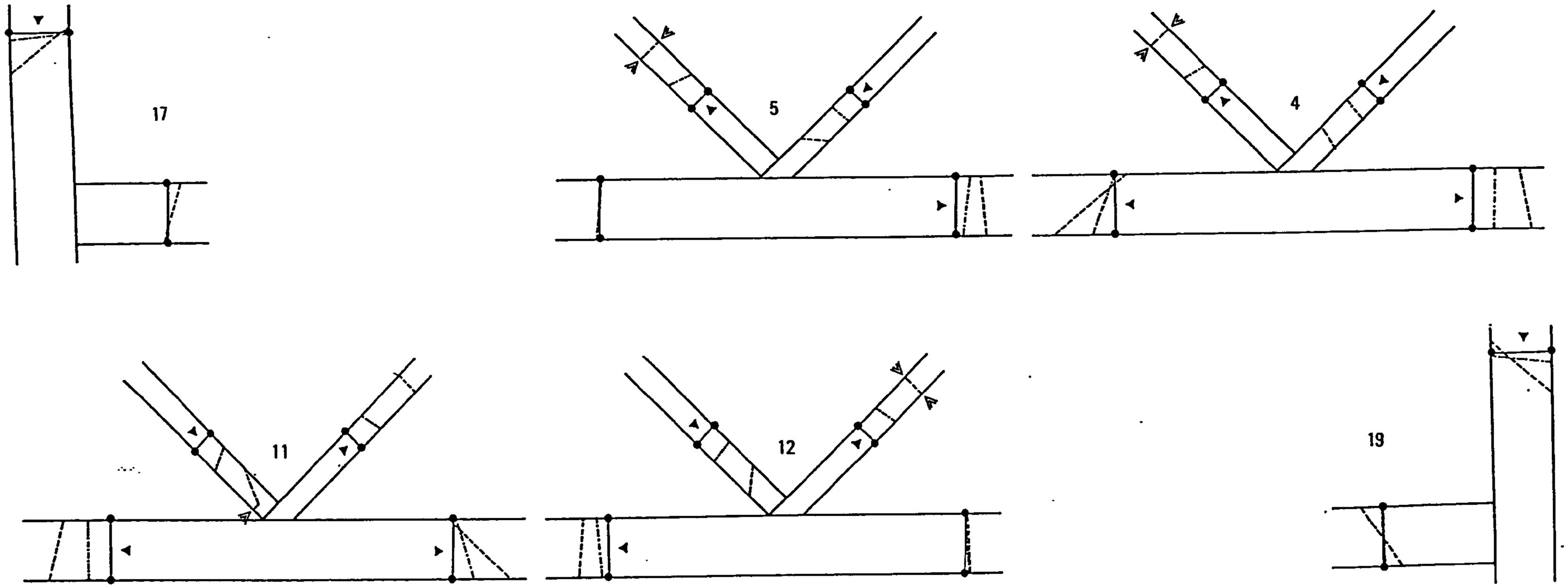

Notes

1 Elastic distribution is plotted at ram load of 100 kN : Ultimate ram load = 263 kN

2 Yield = ⩾

3 Scale ◂ ▸ 200 Nmm^{-2}

Key

—·—·— Elastic

— — — Ultimate

Fig E3(b) Truss T2/2 : Stress distribution at strain gauge positions in the elastic range and at truss ultimate load.

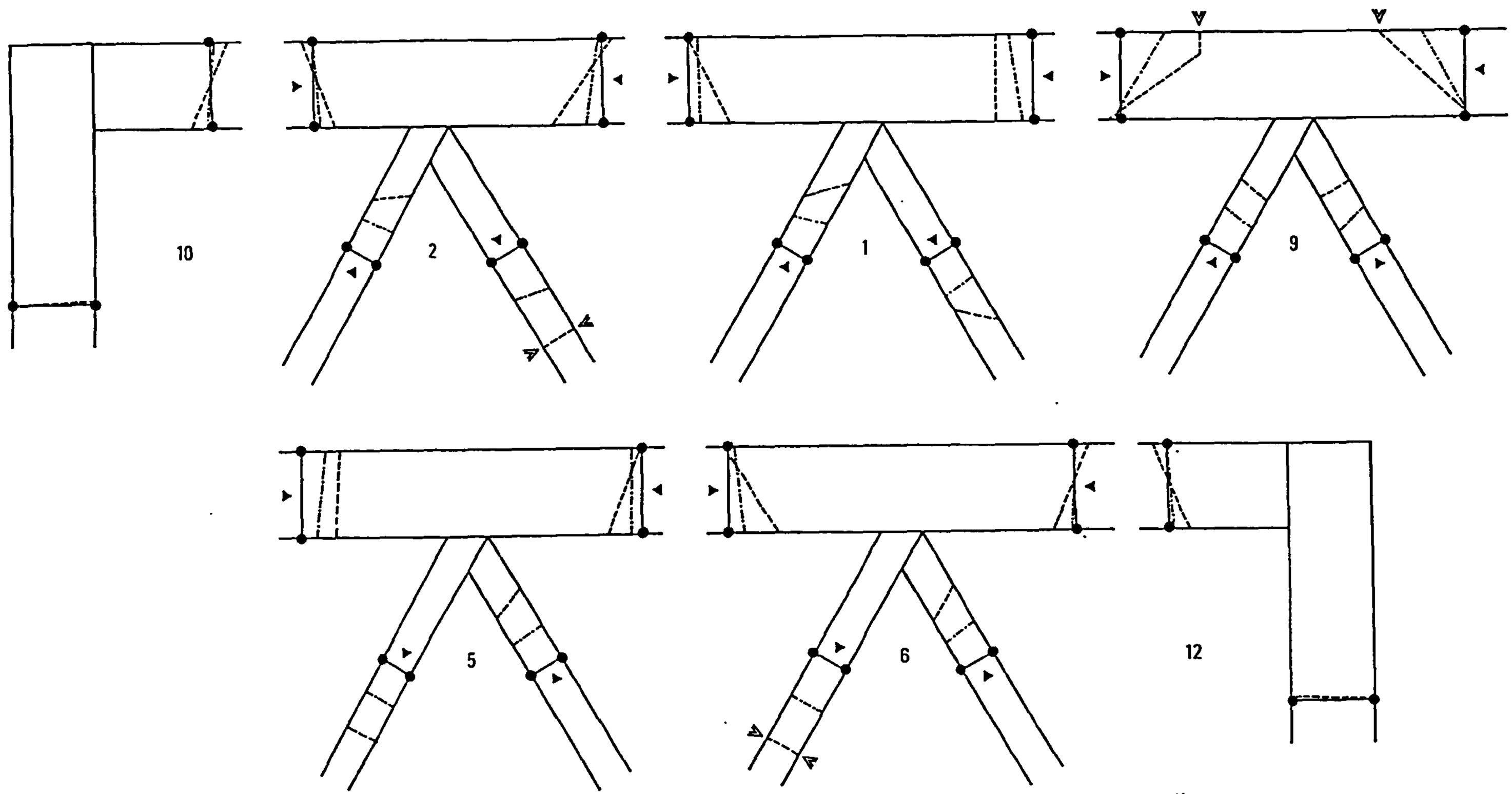

Notes

1 Elastic distribution is plotted at ram load of 200 kN : Ultimate ram load = 380 kN

2 Yield = ⋗

3 Scale ⊢⟷⊣ 200 Nmm^{-2}

Key

—·—·— Elastic

– – – – Ultimate

Fig E4(a) Truss T3 : Stress distribution at strain gauge positions in the elastic range and at truss ultimate load.

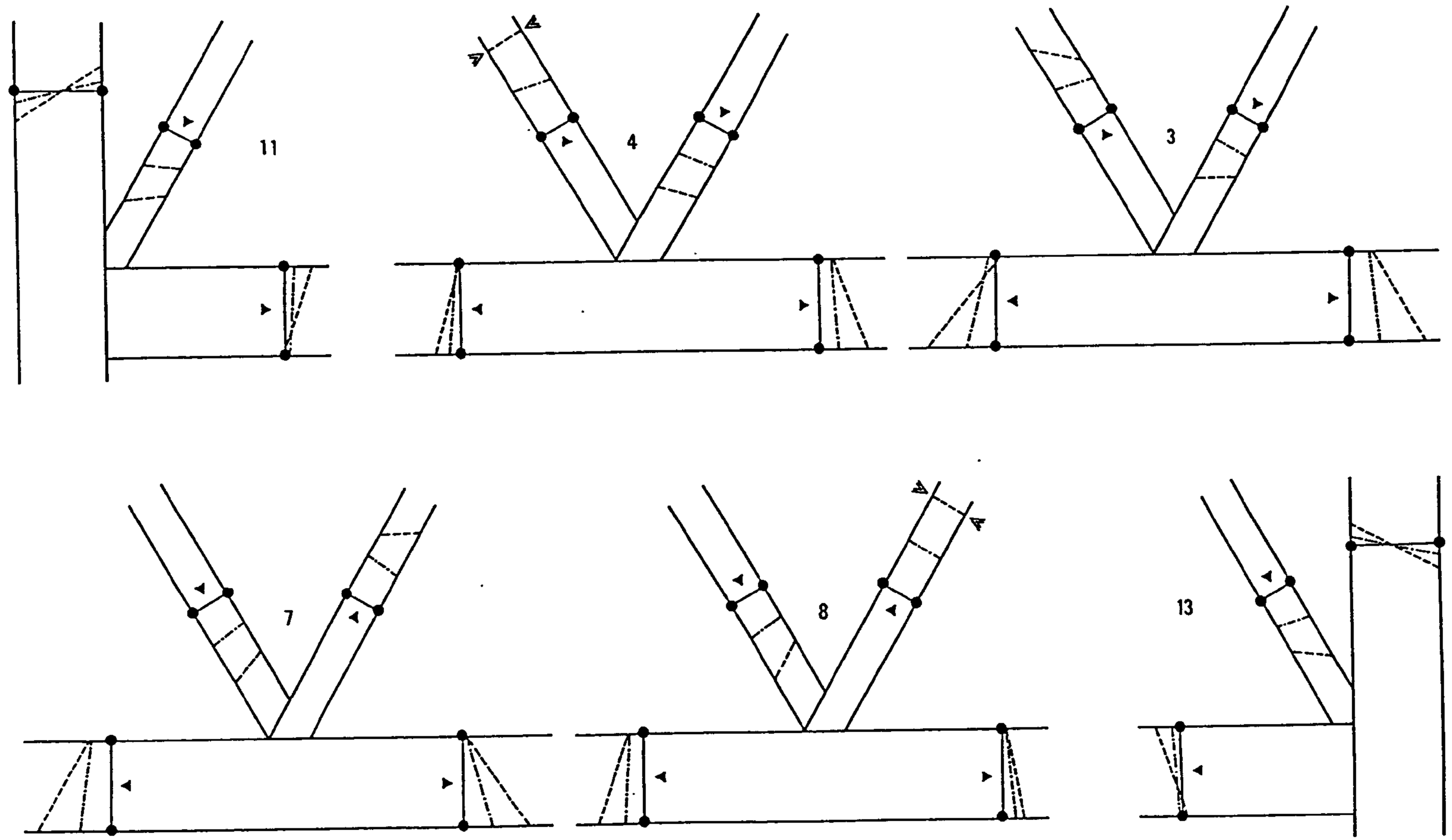

Notes

1 Elastic distribution is plotted at ram load of 200 kN : Ultimate ram load = 380 kN

2 Yield = ⊳

3 Scale ⊢⟷⊣ 200 Nmm^{-2}

Key

—·—·— Elastic

– – – – Ultimate

Fig E4(b) Truss T3 : Stress distribution at strain gauge positions in the elastic range and at truss ultimate load.

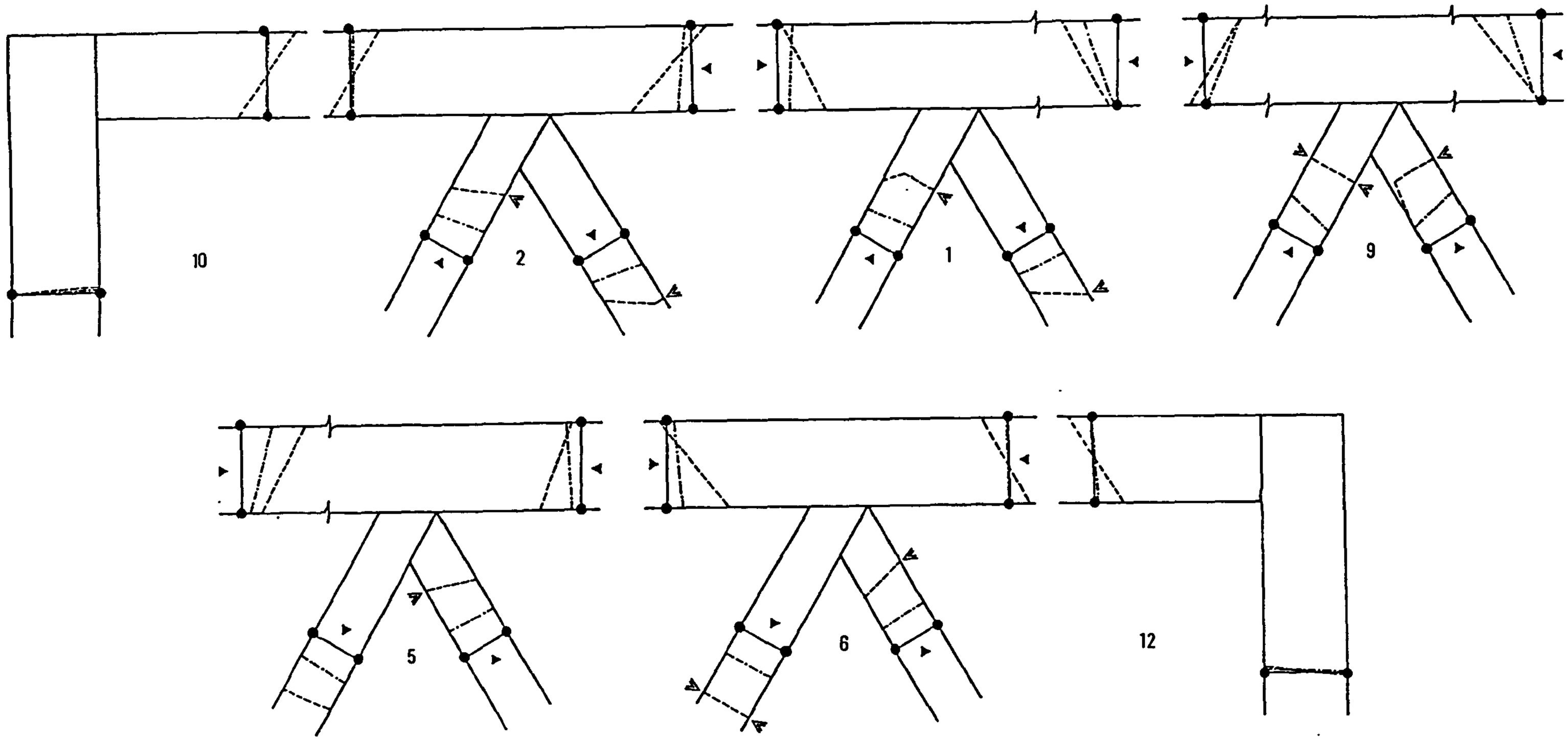

Notes

1 Elastic distribution is plotted at ram load of 200 kN : Ultimate ram load = 475 kN

2 Yield = ⩾

3 Scale ⟷ 200 Nmm^{-2}

Key

—·—·— Elastic

– – – – Ultimate

Fig E5(a) Truss T4 : Stress distribution at strain gauge positions in the elastic range and at truss ultimate load.

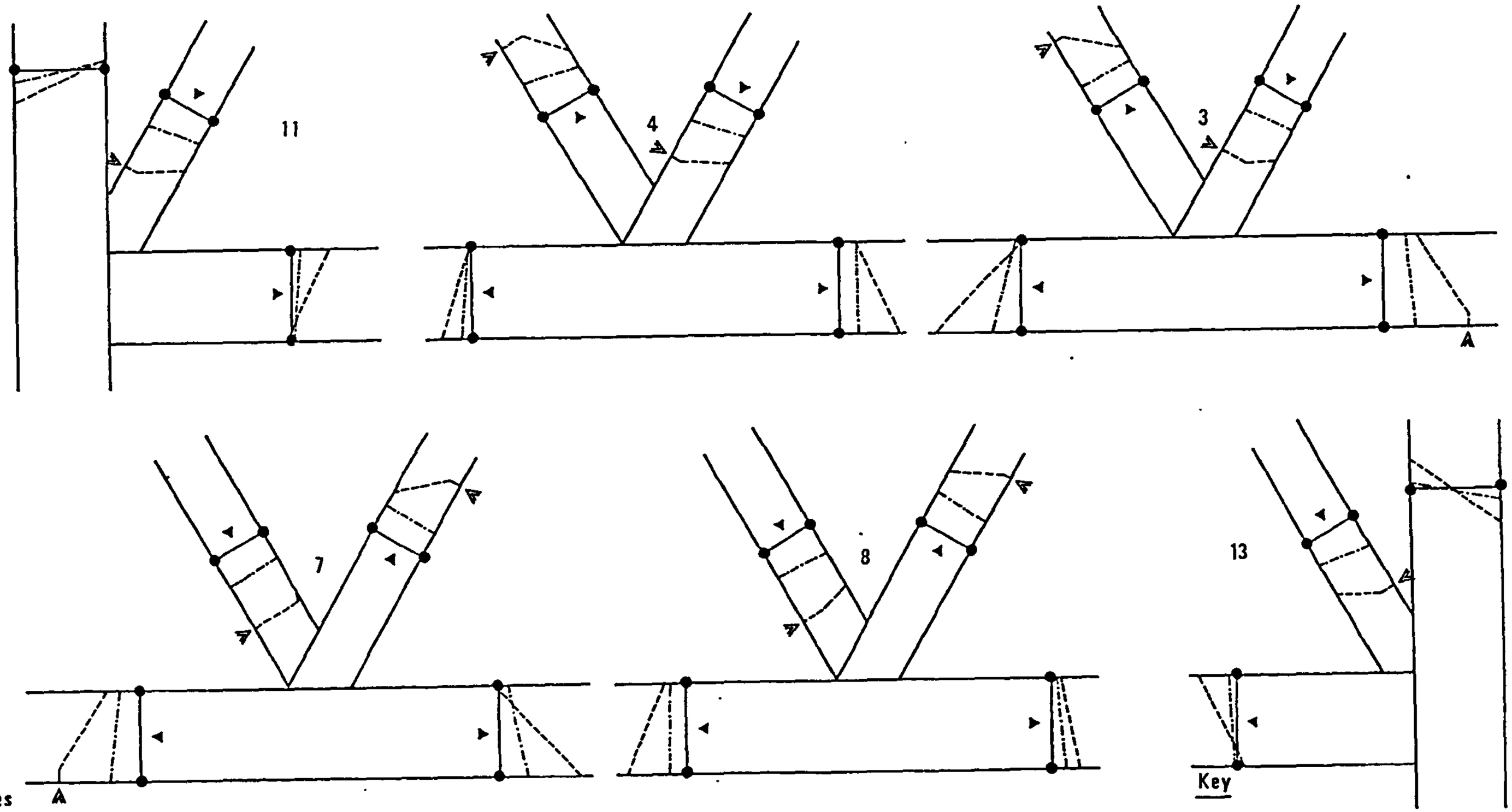

Notes

1 Elastic distribution is plotted at ram load of 200 kN : Ultimate ram load = 475 kN

2 Yield = ➢

3 Scale ⟷ 200 Nmm^{-2}

Fig E5(b) Truss T4 : Stress distribution at strain gauge positions in the elastic range and at truss ultimate load.

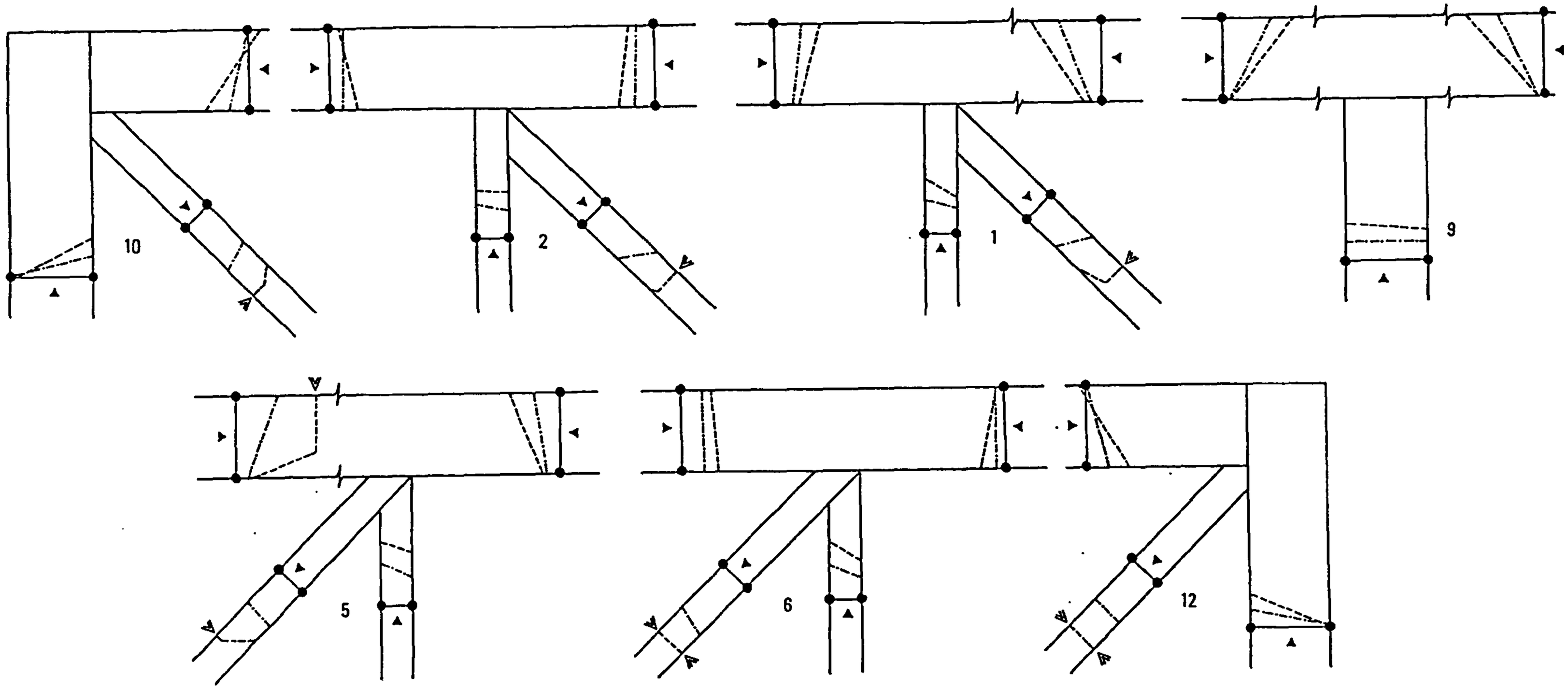

Notes

1 Elastic distribution is plotted at ram load of 200 kN : Ultimate ram load = 330 kN

2 Yield = ▶

3 Scale |←→| 200 Nmm^{-2}

Key

—·—·— Elastic

– – – – Ultimate

Fig E6(a) Truss T5 : Stress distribution at strain gauge positions in the elastic range and at truss ultimate load.

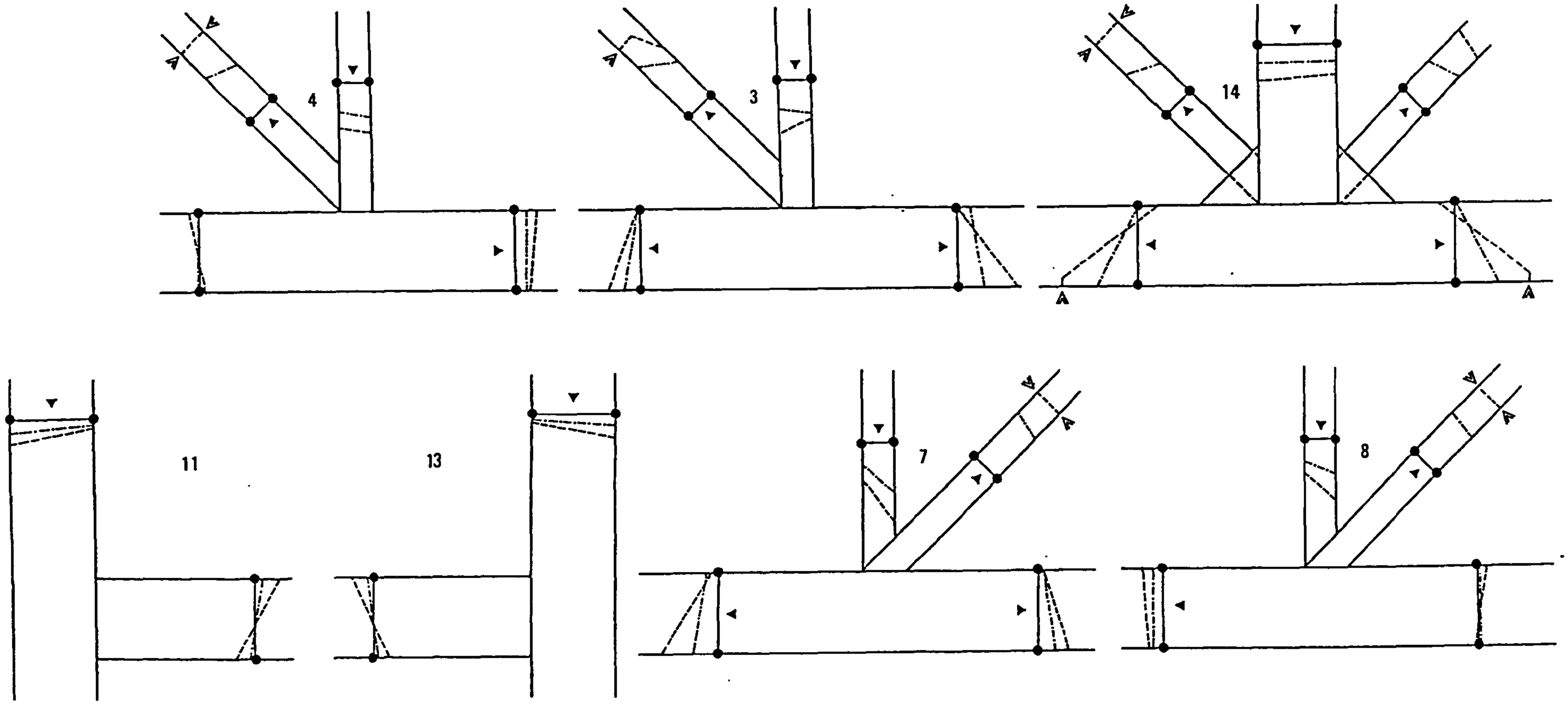

Notes

1 Elastic distribution is plotted at ram load of 200 kN : Ultimate ram load = 330 kN

2 Yield = ≫

3 Scale ⟷ 200 Nmm^{-2}

Key

—·—·— Elastic

– – – – Ultimate

Fig E6(b) Truss T5 : Stress distribution at strain gauge positions in the elastic range and at truss ultimate load.

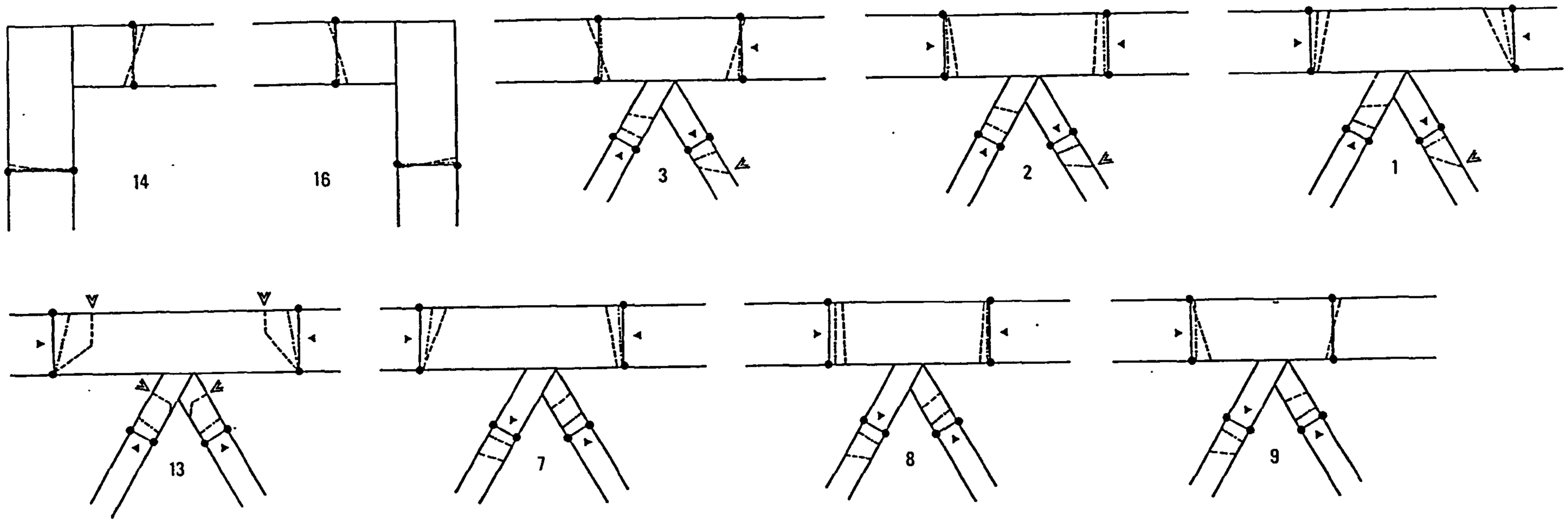

Notes

1 Elastic distribution is plotted at ram load of 200 kN : Ultimate ram load = 560 kN

2 Yield = ≫

3 Scale ⟷ 400 Nmm^{-2}

Key

-·-·-·- Elastic

- - - - - Ultimate

Fig E7(a) Truss T6 : Stress distribution at strain gauge positions in the elastic range and at truss ultimate load.

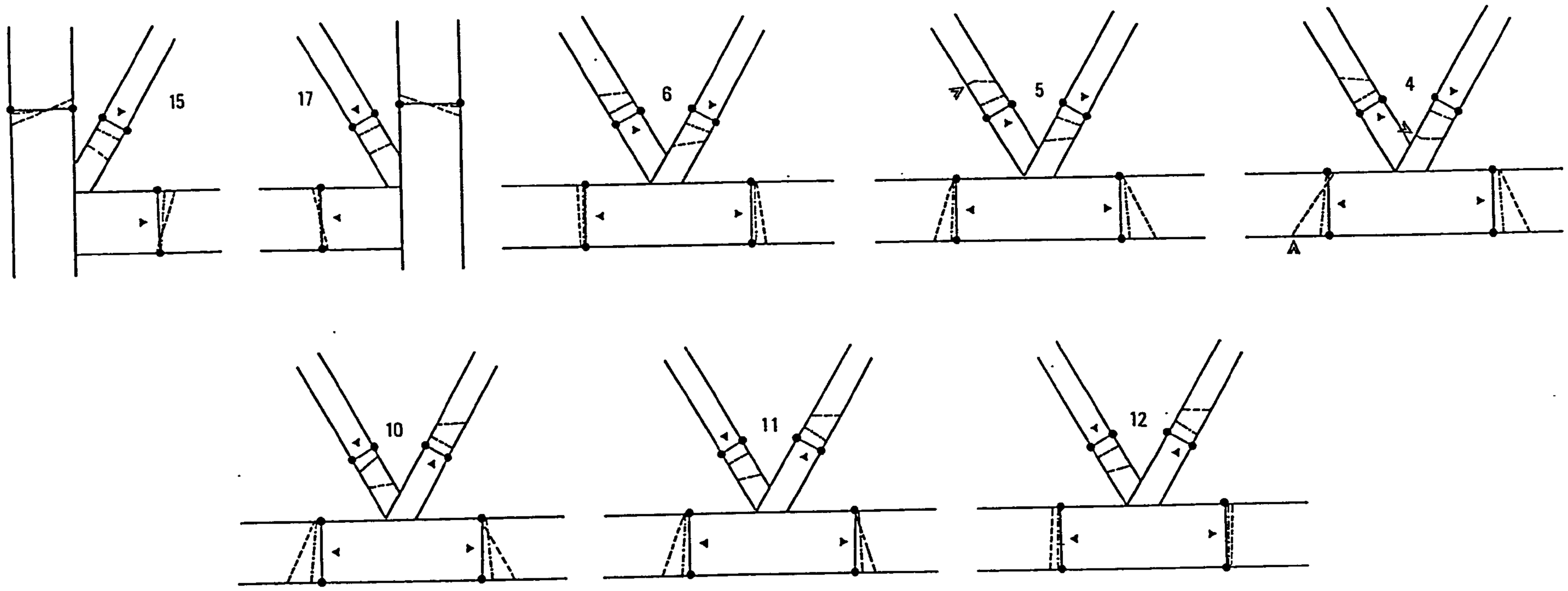

Notes

1 Elastic distribution is plotted at ram load of 200 kN : Ultimate ram load = 560 kN

2 Yield = ⩾

3 Scale ⊢⟷⊣ 400 Nmm^{-2}

Key

—·—·— Elastic

— — — Ultimate

Fig E7(b) Truss T6 : Stress distribution at strain gauge positions in the elastic range and at truss ultimate load.

APPENDIX F

EXPERIMENTAL AND THEORETICAL TRUSS AXIAL FORCES AND BENDING MOMENTS

Table F1 Experimental and theoretical elastic axial force co-efficients for truss T1.

Member	Axial force co-efficients (kN per 1 kN of applied load)			
	Experimental	Theoretical models		
		P	GS	GK
	X_e	X_1	X_2	X_3
1	-0.02	0.00	0.06	0.04
2	0.96	0.93	0.92	0.92
3	1.91	1.87	1.85	1.85
4	2.98	2.80	2.77	2.78
5	3.93	3.73	3.64	3.65
6	2.86	2.80	2.77	2.78
7	1.93	1.87	1.85	1.85
8	0.93	0.93	0.92	0.92
9	0.03	0.00	0.06	0.04
10	0.48	-0.47	-0.46	-0.46
11	1.43	-1.40	-1.38	-1.39
12	2.36	-2.33	-2.31	-2.31
13	3.21	-3.27	-3.20	-3.21
14	3.27	-3.27	-3.20	-3.21
15	2.36	-2.33	-2.31	-2.31
16	1.44	-1.40	-1.38	-1.39
17	0.48	-0.47	-0.46	-0.46
18	0.64	0.68	0.58	0.61
19	0.67	-0.68	-0.65	-0.67
20	0.69	0.68	0.66	0.68
21	0.69	-0.68	-0.66	-0.68
22	0.68	0.68	0.66	0.68
23	0.70	-0.68	-0.66	-0.68
24	0.64	0.68	0.61	0.64
25	0.69	-0.68	-0.64	-0.64
26	0.69	-0.68	-0.64	-0.64
27	0.65	0.68	0.61	0.64
28	0.71	-0.68	-0.66	-0.68
29	0.69	0.68	0.66	0.68
30	0.68	-0.68	-0.66	-0.68
31	0.68	0.68	0.66	0.68
32	0.72	-0.68	-0.65	-0.67
33	0.64	0.68	0.58	0.61
34	0.51	0.50	-0.45	-0.46
35	0.51	0.50	-0.45	-0.46

Notes :

1) To be read in conjunction with Fig S1.
2) Forces shown are per 1 kN of applied ram load.
3) Experimental co-efficients have been derived from the measured strain gauge values at a ram load of 50 kN.
4) For definition of theoretical models see Chapter 7.

Table F2 Experimental and theoretical elastic axial force co-efficients for truss T2.

Member	Axial force co-efficients (kN per 1 kN of applied load)					
	Experimental	Theoretical models				
		P	S1	S2	Y	K
	X_e	X_1	X_2	X_3	X4	X5
1	0.02	0.00	0.03	0.03	0.04	0.04
2	0.95	1.08	0.92	0.92	0.92	0.99
3	1.92	2.15	1.85	1.84	1.85	1.80
4	2.86	3.23	2.77	2.77	2.77	2.69
5	3.80	4.31	3.68	3.68	3.68	3.58
6	2.88	3.23	2.77	2.77	2.77	2.69
7	1.92	2.15	1.85	1.84	1.85	1.80
8	0.96	1.08	0.92	0.92	0.92	0.99
9	0.03	0.00	0.03	0.03	0.04	0.04
10	-0.47	-0.54	-0.46	-0.46	-0.46	-0.44
11	-1.43	-1.62	-1.38	-1.38	-1.39	-1.35
12	-2.36	-2.69	-2.31	-2.31	-2.31	-2.25
13	-3.26	-3.77	-3.20	-3.20	-3.20	-3.11
14	-3.22	-3.77	-3.20	-3.20	-3.20	-3.11
15	-2.40	-2.69	-2.31	-2.31	-2.31	-2.25
16	-1.44	-1.62	-1.38	-1.38	-1.39	-1.35
17	-0.47	-0.54	-0.46	-0.46	-0.46	-0.44
18	0.61	0.74	0.58	0.58	0.57	0.55
19	-0.64	-0.74	-0.63	-0.63	-0.64	-0.62
20	0.64	0.74	0.63	0.63	0.64	0.62
21	-0.64	-0.74	-0.63	-0.63	-0.63	-0.62
22	0.65	0.74	0.64	0.64	0.64	0.62
23	-0.63	-0.74	-0.62	-0.63	-0.63	-0.60
24	0.60	0.74	0.59	0.59	0.59	0.57
25	-0.68	-0.74	-0.65	-0.65	-0.65	-0.65
26	-0.71	-0.74	-0.66	-0.65	-0.65	-0.65
27	0.60	0.74	0.59	0.59	0.59	0.57
28	-0.63	-0.74	-0.62	-0.63	-0.63	-0.60
29	0.63	0.74	0.64	0.64	0.64	0.62
30	-0.66	-0.74	-0.63	-0.63	-0.63	-0.62
31	0.64	0.74	0.63	0.63	0.64	0.62
32	-0.67	-0.74	-0.63	-0.63	-0.64	-0.62
33	0.61	0.74	0.58	0.58	0.57	0.55
34	-0.52	-0.50	-0.43	-0.43	-0.43	-0.42
35	-0.51	-0.50	-0.43	-0.43	-0.43	-0.42

Notes :

1) To be read in conjunction with Fig S1.
2) Forces shown are per 1 kN of applied ram load.
3) Experimental co-efficients have been derived from the measured strain gauge values at a ram load of 50 kN.
4) For definition of theoretical models see Chapter 7.

Table F3 Experimental and theoretical elastic axial force co-efficients for truss T3.

Member	Axial force co-efficients (kN per 1 kN of applied load)					
	Experimental	Theoretical models				
		P	S1	S2	Y	K
	X_e	X_1	X_2	X_3	X4	X5
1	0.26	0.25	0.26	0.26	0.25	0.25
2	0.67	0.75	0.68	0.68	0.69	0.67
3	1.02	1.25	1.03	1.03	1.03	0.99
4	0.66	0.75	0.68	0.68	0.69	0.67
5	0.25	0.25	0.26	0.26	0.25	0.25
6	-0.06	0.00	-0.06	-0.06	-0.06	-0.08
7	-0.46	-0.50	-0.47	-0.47	-0.47	-0.46
8	-0.80	-1.00	-0.84	-0.84	-0.84	-0.82
9	-0.79	-1.00	-0.84	-0.84	-0.84	-0.82
10	-0.45	-0.50	-0.47	-0.47	-0.47	-0.46
11	-0.05	0.00	-0.06	-0.06	-0.06	-0.08
12	-0.44	-0.56	-0.44	-0.44	-0.41	-0.37
13	0.47	0.56	0.46	0.47	0.49	0.47
14	-0.47	-0.56	-0.46	-0.47	-0.48	-0.45
15	0.38	0.56	0.37	0.37	0.35	0.33
16	-0.43	-0.56	-0.42	-0.43	-0.41	-0.40
17	-0.44	-0.56	-0.42	-0.43	-0.41	-0.40
18	0.39	0.56	0.37	0.37	0.35	0.33
19	-0.46	-0.56	-0.46	-0.47	-0.48	-0.45
20	0.48	0.56	0.46	0.47	0.49	0.47
21	-0.43	-0.56	-0.44	-0.44	-0.41	-0.37
22	-0.06	0.00	-0.07	-0.06	-0.09	-0.12
23	-0.06	0.00	-0.07	-0.06	-0.09	-0.12

Notes :

1) To be read in conjunction with Fig S1.
2) Forces shown are per 1 kN of applied ram load.
3) Experimental co-efficients have been derived from the measured strain gauge values at a ram load of 200 kN.
4) For definition of theoretical models see Chapter 7.

Table F4 Experimental and theoretical elastic axial force co-efficients for truss T4.

Member	Axial force co-efficients (kN per 1 kN of applied load)					
	Experimental	Theoretical models				
		P	S1	S2	Y	K
	X_e	X_1	X_2	X_3	X4	X5
1	0.25	0.25	0.25	0.25	0.24	0.24
2	0.67	0.75	0.68	0.68	0.69	0.67
3	1.05	1.25	1.05	1.06	1.04	1.01
4	0.67	0.75	0.68	0.68	0.69	0.67
5	0.25	0.25	0.25	0.25	0.24	0.24
6	-0.05	0.00	-0.05	-0.05	-0.05	-0.07
7	-0.46	-0.50	-0.47	-0.47	-0.47	-0.46
8	-0.85	-1.00	-0.86	-0.85	-0.85	-0.83
9	-0.85	-1.00	-0.86	-0.85	-0.85	-0.83
10	-0.46	-0.50	-0.47	-0.47	-0.47	-0.46
11	-0.06	0.00	-0.05	-0.05	-0.05	-0.07
12	-0.44	-0.56	-0.43	-0.44	-0.42	-0.38
13	0.47	0.56	0.47	0.49	0.49	0.48
14	-0.47	-0.56	-0.46	-0.47	-0.47	-0.45
15	0.37	0.56	0.39	0.40	0.36	0.34
16	-0.44	-0.56	-0.44	-0.45	-0.42	-0.42
17	-0.46	-0.56	-0.44	-0.45	-0.42	-0.42
18	0.40	0.56	0.39	0.40	0.36	0.34
19	-0.46	-0.56	-0.46	-0.47	-0.47	-0.45
20	0.47	0.56	0.47	0.59	0.49	0.48
21	-0.43	-0.56	-0.43	-0.44	-0.42	-0.38
22	-0.06	0.00	-0.08	-0.07	-0.09	-0.12
23	-0.06	0.00	-0.08	-0.07	-0.09	-0.12

Notes :

1) To be read in conjunction with Fig S1.
2) Forces shown are per 1 kN of applied ram load.
3) Experimental co-efficients have been derived from the measured strain gauge values at a ram load of 200 kN.
4) For definition of theoretical models see Chapter 7.

Table F5 Experimental and theoretical elastic axial force co-efficients for truss T5.

Member	Axial force co-efficients (kN per 1 kN of applied load)					
	Experimental	Theoretical models				
		P	S1	S2	Y	K
	X_e	X_1	X_2	X_3	X4	X5
1	0.07	0.00	0.06	0.06	0.06	0.09
2	0.48	0.50	0.47	0.47	0.47	0.46
3	0.93	1.00	0.90	0.89	0.91	0.88
4	0.93	1.00	0.90	0.90	0.91	0.89
5	0.46	0.50	0.47	0.46	0.46	0.46
6	0.07	0.00	0.07	0.07	0.07	0.09
7	-0.48	-0.50	-0.46	-0.47	-0.45	-0.45
8	-0.90	-1.00	-0.88	-0.89	-0.90	-0.87
9	-1.22	-1.50	-1.23	-1.23	-1.21	-1.16
10	-1.24	-1.50	-1.23	-1.23	-1.21	-1.16
11	-0.90	-1.00	-0.89	-0.89	-0.90	-0.88
12	-0.47	-0.50	-0.46	-0.46	-0.45	-0.45
13	0.60	0.71	0.56	0.57	0.55	0.51
14	-0.41	-0.50	-0.39	-0.41	-0.39	-0.37
15	0.64	0.71	0.58	0.60	0.61	0.58
16	-0.41	-0.50	-0.38	-0.39	-0.40	-0.38
17	0.51	0.71	0.47	0.48	0.43	0.39
18	-0.86	-1.00	-0.80	-0.81	-0.75	-0.71
19	0.47	0.71	0.46	0.47	0.43	0.38
20	-0.38	-0.50	-0.39	-0.40	-0.40	-0.39
21	0.64	0.71	0.59	0.61	0.62	0.59
22	-0.40	-0.50	-0.40	-0.41	-0.40	-0.37
23	0.56	0.71	0.55	0.56	0.54	0.51
24	-0.47	-0.50	-0.46	-0.46	-0.46	-0.44
25	-0.45	-0.50	-0.45	-0.46	-0.44	-0.43

Notes :

1) To be read in conjunction with Fig S1.
2) Forces shown are per 1 kN of applied ram load.
3) Experimental co-efficients have been derived from the measured strain gauge values at a ram load of 200 kN.
4) For definition of theoretical models see Chapter 7.

Table F6 Experimental and theoretical elastic axial force co-efficients for truss T6.

Member	Axial force co-efficients (kN per 1 kN of applied load)					
	Experimental	Theoretical models				
		P	S1	S2	Y	K
	X_e	X_1	X_2	X_3	X4	X5
1	0.28	0.25	0.27	0.27	0.26	0.27
2	0.65	0.75	0.65	0.64	0.64	0.62
3	1.09	1.25	1.02	1.02	1.05	0.99
4	1.45	1.75	1.36	1.36	1.31	1.21
5	1.06	1.25	1.02	1.02	1.05	0.99
6	0.66	0.75	0.65	0.64	0.64	0.62
7	0.27	0.25	0.27	0.27	0.26	0.27
8	-0.04	0.00	-0.09	-0.09	-0.10	-0.15
9	-0.48	-0.50	-0.45	-0.46	-0.45	-0.44
10	-0.82	-1.00	-0.83	-0.83	-0.85	-0.80
11	-1.17	-1.50	-1.18	-1.18	-1.17	-1.08
12	-1.18	-1.50	-1.18	-1.18	-1.17	-1.08
13	-0.87	-1.00	-0.83	-0.83	-0.85	-0.80
14	-0.49	-0.50	-0.45	-0.46	-0.45	-0.44
15	-0.06	0.00	-0.09	-0.09	-0.10	-0.15
16	-0.39	-0.56	-0.38	-0.39	-0.35	-0.26
17	0.39	0.56	0.40	0.42	0.41	0.37
18	-0.43	-0.56	-0.41	-0.42	-0.41	-0.37
19	0.41	0.56	0.40	0.42	0.44	0.41
20	-0.41	-0.56	-0.41	-0.42	-0.44	-0.39
21	0.34	0.56	0.34	0.36	0.24	0.20
22	-0.41	-0.56	-0.41	-0.42	-0.32	-0.31
23	-0.40	-0.56	-0.41	-0.42	-0.32	-0.31
24	0.34	0.56	0.34	0.36	0.24	0.20
25	-0.42	-0.56	-0.41	-0.42	-0.44	-0.39
26	0.42	0.56	0.40	0.42	0.44	0.41
27	-0.41	-0.56	-0.41	-0.42	-0.41	-0.37
28	0.41	0.56	0.40	0.42	0.41	0.37
29	-0.39	-0.56	-0.38	-0.40	-0.35	-0.26
30	-0.07	0.00	-0.09	-0.08	-0.13	-0.18
31	-0.09	0.00	-0.09	-0.08	-0.13	-0.18

Notes :

1) To be read in conjunction with Fig S1.
2) Forces shown are per 1 kN of applied ram load.
3) Experimental co-efficients have been derived from the measured strain gauge values at a ram load of 200 kN.
4) For definition of theoretical models see Chapter 7.

Table F7 Comparison of experimental and theoretical elastic axial forces for truss T1.

Member	Percentage difference between theoretical and experimental values $(X_n-X_e).100/X_e$		
	P	GS	GK
2	-2.9%	-4.2%	-4.5%
3	-2.5%	-3.6%	-3.6%
4	-6.0%	-6.9%	-6.8%
5	-4.9%	-7.2%	-7.1%
6	-2.1%	-3.0%	-3.0%
7	-3.5%	-4.6%	-4.6%
8	0.5%	-0.8%	-1.1%
10	-2.5%	-4.2%	-3.8%
11	-2.2%	-3.3%	-3.2%
12	-1.3%	-2.3%	-2.2%
13	1.9%	-0.1%	0.1%
14	-0.1%	-2.0%	-1.8%
15	-1.0%	-2.0%	-2.0%
16	-2.9%	-4.0%	-4.0%
17	-2.9%	-4.6%	-4.2%
18	6.2%	-9.3%	-5.3%
19	2.1%	-2.5%	-0.4%
20	-0.7%	-4.4%	-1.0%
21	-0.6%	-4.8%	-1.9%
22	0.1%	-3.2%	-0.6%
23	-1.6%	-5.5%	-2.6%
24	6.2%	-4.7%	-1.4%
25	-0.4%	-7.4%	-6.3%
26	-1.4%	-8.4%	-7.2%
27	5.7%	-5.1%	-1.9%
28	-3.7%	-7.5%	-4.6%
29	-1.4%	-4.8%	-2.2%
30	0.6%	-3.7%	-0.7%
31	0.4%	-3.2%	0.1%
32	-4.5%	-8.8%	-6.8%
33	7.7%	-8.0%	-3.9%
34	-2.7%	-13.2%	-10.3%
35	-1.8%	-12.4%	-9.4%

Notes :

1) To be read in conjunction with Figs S1.
2) Forces shown are per 1 kN of applied ram load.
3) Experimental co-efficients have been derived from the measured strain gauge values at a ram load of 50 kN.
4) For definition of theoretical models see Chapter 7.

Table F8 Comparison of experimental and theoretical elastic axial forces for truss T2.

Member	Percentage difference between theoretical and experimental values $(X_n-X_e).100/X_e$				
	P	S1	S2	Y	K
2	13.0%	-3.4%	-3.4%	-3.4%	3.4%
3	12.4%	-3.7%	-3.7%	-3.7%	-6.2%
4	13.2%	-3.0%	-2.9%	-2.9%	-5.7%
5	13.3%	-3.3%	-3.3%	-3.3%	-5.8%
6	12.1%	-3.9%	-3.8%	-3.9%	-6.6%
7	12.1%	-4.0%	-4.0%	-4.0%	-6.5%
8	11.9%	-4.3%	-4.3%	-4.3%	2.4%
10	13.9%	-3.3%	-3.3%	-3.8%	-6.3%
11	13.3%	-3.0%	-2.9%	-2.9%	-5.5%
12	14.0%	-2.1%	-2.2%	-2.2%	-4.7%
13	15.8%	-1.7%	-1.6%	-1.6%	-4.5%
14	17.3%	-0.5%	-0.4%	-0.4%	-3.3%
15	12.0%	-3.8%	-3.8%	-3.8%	-6.4%
16	12.4%	-3.8%	-3.7%	-3.7%	-6.3%
17	14.2%	-3.1%	-3.1%	-3.6%	-6.1%
18	21.5%	-4.5%	-4.4%	-5.5%	-8.8%
19	14.3%	-1.7%	-1.5%	-1.1%	-3.9%
20	14.1%	-1.8%	-1.5%	-1.2%	-3.9%
21	14.5%	-2.0%	-2.0%	-2.0%	-4.2%
22	12.4%	-2.2%	-2.2%	-2.3%	-5.1%
23	15.9%	-1.8%	-1.2%	-1.3%	-4.9%
24	21.9%	-2.6%	-2.4%	-2.3%	-5.0%
25	7.8%	-4.0%	-4.4%	-4.1%	-5.0%
26	4.0%	-7.3%	-7.8%	-7.5%	-8.4%
27	22.5%	-2.1%	-1.9%	-1.8%	-4.5%
28	16.3%	-1.6%	-0.9%	-1.0%	-4.6%
29	16.7%	1.5%	1.5%	1.4%	-1.4%
30	10.9%	-5.1%	-5.1%	-5.1%	-7.2%
31	15.4%	-0.8%	-0.4%	-0.2%	-2.8%
32	9.9%	-5.4%	-5.4%	-4.9%	-7.6%
33	21.3%	-4.6%	-4.5%	-5.6%	-8.9%
34	-3.1%	-16.3%	-16.3%	-17.1%	-18.8%
35	-1.6%	-15.0%	-14.9%	-15.8%	-17.5%

Notes :
1) To be read in conjunction with Fig S1.
2) Forces shown are per 1 kN of applied ram load.
3) Experimental co-efficients have been derived from the measured strain gauge values at a ram load of 50 kN.
4) For definition of theoretical models see Chapter 7.

Table F9 Comparison of experimental and theoretical elastic axial forces for truss T3.

Member	Percentage difference between theoretical and experimental values $(X_n-X_e).100/X_e$				
	P	S1	S2	Y	K
1	-2.3%	0.0%	0.0%	-3.5%	-2.0%
2	12.4%	1.5%	1.3%	2.7%	0.1%
3	22.1%	0.8%	0.9%	0.2%	-3.0%
4	13.1%	2.1%	1.9%	3.3%	0.8%
5	-0.8%	1.6%	1.7%	-2.0%	-0.4%
6		-4.9%	-5.4%	-1.6%	36.1%
7	9.9%	2.4%	2.6%	2.6%	1.5%
8	24.4%	5.0%	4.9%	4.9%	1.4%
9	26.1%	6.4%	6.3%	6.3%	2.8%
10	10.1%	2.6%	2.8%	2.9%	1.8%
11		26.1%	25.4%	30.4%	80.4%
12	28.2%	0.0%	1.3%	-6.0%	-15.6%
13	18.9%	-1.3%	0.3%	3.8%	-0.4%
14	19.7%	-1.3%	0.1%	1.7%	-3.9%
15	47.9%	-2.6%	-1.0%	-7.9%	-14.0%
16	28.8%	-3.2%	-1.9%	-5.8%	-7.8%
17	25.9%	-5.4%	-4.1%	-7.9%	-9.9%
18	44.1%	-5.2%	-3.5%	-10.3%	-16.2%
19	21.3%	0.0%	1.4%	3.0%	-2.6%
20	17.4%	-2.5%	-1.0%	2.5%	-1.7%
21	30.0%	1.4%	2.7%	-4.7%	-14.4%
22		0.0%	14.4%	65.5%	121.8%
23		1.9%	6.6%	54.2%	106.8%

Notes :

1) To be read in conjunction with Fig S1.
2) Forces shown are per 1 kN of applied ram load.
3) Experimental co-efficients have been derived from the measured strain gauge values at a ram load of 200 kN.
4) For definition of theoretical models see Chapter 7.

Table F10 Comparison of experimental and theoretical elastic axial forces for truss T4.

Member	Percentage difference between theoretical and experimental values $(X_n-X_e).100/X_e$				
	P	S1	S2	Y	K
1	-1.2%	-2.0%	-1.6%	-4.3%	-4.0%
2	11.4%	0.7%	0.5%	1.8%	-0.4%
3	19.5%	0.5%	0.9%	-0.4%	-3.3%
4	12.3%	1.5%	1.3%	2.5%	0.3%
5	-0.8%	-1.6%	-1.2%	-4.0%	-3.6%
6		4.3%	4.1%	8.7%	50.0%
7	9.9%	2.2%	2.4%	2.6%	1.5%
8	17.8%	0.8%	0.7%	0.6%	-2.6%
9	17.6%	0.7%	0.6%	0.5%	-2.7%
10	8.2%	0.6%	0.9%	1.1%	0.0%
11		-15.8%	-16.0%	-12.3%	21.1%
12	27.3%	-1.4%	1.2%	-4.8%	-13.9%
13	19.4%	1.1%	4.1%	4.7%	1.7%
14	18.4%	-3.0%	-0.3%	-0.6%	-4.9%
15	51.1%	4.1%	7.4%	-2.2%	-7.6%
16	26.2%	-0.5%	1.9%	-4.3%	-6.3%
17	22.6%	-3.3%	-1.0%	-7.0%	-9.0%
18	41.2%	-2.8%	0.4%	-8.6%	-13.6%
19	22.9%	0.7%	3.4%	3.1%	-1.3%
20	18.2%	0.0%	24.2%	3.6%	0.6%
21	30.6%	1.2%	3.8%	-2.3%	-11.7%
22		22.6%	12.8%	46.8%	95.2%
23		22.6%	12.8%	46.8%	95.2%

Notes :

1) To be read in conjunction with Fig S1.
2) Forces shown are per 1 kN of applied ram load.
3) Experimental co-efficients have been derived from the measured strain gauge values at a ram load of 200 kN.
4) For definition of theoretical models see Chapter 7.

Table F11 Comparison of experimental and theoretical elastic axial forces for truss T5.

Member	Percentage difference between theoretical and experimental values $(X_n-X_e).100/X_e$				
	P	S1	S2	Y	K
1		-10.1%	-11.8%	-7.2%	30.4%
2	5.3%	-0.4%	-1.4%	-2.1%	-3.2%
3	7.8%	-3.4%	-4.1%	-2.2%	-5.0%
4	7.1%	-3.5%	-4.1%	-2.5%	-4.9%
5	8.2%	1.1%	0.2%	-0.2%	-1.3%
6		-1.5%	-2.2%	1.5%	29.9%
7	5.3%	-2.9%	-1.8%	-4.4%	-5.1%
8	10.6%	-2.2%	-1.7%	-0.9%	-3.5%
9	22.5%	0.1%	0.3%	-1.1%	-5.4%
10	21.4%	-0.9%	-0.7%	-1.9%	-6.1%
11	11.7%	-0.7%	-0.1%	0.4%	-2.0%
12	6.4%	-2.8%	-1.8%	-4.0%	-5.1%
13	17.6%	-6.8%	-5.0%	-8.8%	-15.3%
14	21.1%	-4.6%	-1.7%	-6.3%	-10.7%
15	10.6%	-9.5%	-6.8%	-5.0%	-9.1%
16	22.5%	-6.4%	-3.3%	-2.5%	-6.4%
17	39.7%	-8.1%	-5.5%	-15.8%	-23.3%
18	17.0%	-6.5%	-5.2%	-11.8%	-17.2%
19	49.5%	-3.2%	-0.7%	-10.1%	-18.8%
20	32.3%	2.1%	5.2%	5.3%	1.9%
21	11.0%	-6.8%	-4.0%	-3.1%	-7.1%
22	24.4%	0.0%	3.0%	-1.2%	-7.5%
23	25.4%	-1.8%	-0.0%	-3.7%	-10.3%
24	6.4%	-3.2%	-2.4%	-3.2%	-6.4%
25	12.4%	0.0%	3.1%	-0.2%	-3.4%

Notes :

1) To be read in conjunction with Fig S1.
2) Forces shown are per 1 kN of applied ram load.
3) Experimental co-efficients have been derived from the measured strain gauge values at a ram load of 200 kN.
4) For definition of theoretical models see Chapter 7.

Table F12 Comparison of experimental and theoretical elastic axial forces for truss T6.

Member	Percentage difference between theoretical and experimental values $(X_n-X_e).100/X_e$				
	P	S1	S2	Y	K
1	-10.4%	-4.3%	-3.2%	-7.9%	-3.2%
2	14.9%	-1.2%	-1.2%	-2.0%	-5.8%
3	15.1%	-5.9%	-6.2%	-3.4%	-9.3%
4	20.9%	-6.0%	-5.8%	-9.6%	-16.2%
5	17.8%	-3.7%	-4.0%	-1.1%	-7.2%
6	14.0%	-2.0%	-2.0%	-2.7%	-6.5%
7	-7.7%	-1.5%	-0.5%	-5.2%	-0.4%
9	4.6%	-5.2%	-4.6%	-6.1%	-7.7%
10	21.4%	0.8%	0.8%	2.5%	-2.4%
11	27.9%	0.6%	0.4%	-0.7%	-8.1%
12	27.0%	-0.1%	-0.2%	-1.4%	-8.7%
13	15.6%	-3.9%	-3.9%	-2.3%	-7.1%
14	2.9%	-6.8%	-6.2%	-7.6%	-9.3%
16	44.4%	-1.8%	2.0%	-10.9%	-32.0%
17	42.2%	2.3%	6.1%	5.1%	-5.9%
18	29.4%	-6.0%	-2.4%	-5.3%	-13.7%
19	36.3%	-2.9%	1.3%	7.8%	-0.5%
20	35.0%	-1.7%	1.5%	5.3%	-6.3%
21	66.9%	2.7%	6.3%	-27.8%	-41.5%
22	37.3%	0.2%	2.7%	-20.4%	-24.8%
23	39.4%	1.7%	4.1%	-19.2%	-23.7%
24	64.9%	1.5%	5.0%	-28.6%	-42.2%
25	34.7%	-1.9%	1.2%	5.1%	-6.5%
26	34.4%	-4.3%	-0.1%	6.3%	-1.9%
27	35.0%	-1.9%	2.0%	-1.2%	-9.9%
28	35.0%	-2.9%	0.9%	-0.2%	-10.6%
29	41.9%	-3.6%	0.3%	-12.4%	-33.2%
30		6.4%	15.9%	75.0%	152.8%
31		0.0%	-8.3%	38.5%	100.0%

Notes :
1) To be read in conjunction with Fig S1.
2) Forces shown are per 1 kN of applied ram load.
3) Experimental co-efficients have been derived from the measured strain gauge values at a ram load of 200 kN.
4) For definition of theoretical models see Chapter 7.

Table F13 Experimental and theoretical elastic bending moment co-efficients for truss T1

Member	Bending Moment co-efficients (kNmm per 1 kN of applied load)					
	Experimental		GS		GK	
	end 1	end 2	end 1	end 2	end 1	end 2
1	23.27	7.52	24.00	13.81	19.72	7.89
2	4.85	11.62	3.88	15.01	-5.68	5.22
3	-2.49	22.07	5.38	19.34	-3.57	10.81
4	-6.42	32.95	-0.00	31.31	-8.58	20.18
5	-22.75	32.94	-17.91	17.92	-19.67	19.68
6	-31.02	7.97	-31.30	0.37	-20.18	8.58
7	-26.21	0.37	-19.42	-5.50	-10.82	3.42
8	-9.64	3.49	-14.84	-3.82	-5.05	5.82
9	-8.99	-25.25	-14.14	-24.03	-8.08	-19.75
10	25.97	8.66	19.48	15.26	13.11	7.45
11	0.95	15.02	5.95	18.99	-5.09	8.61
12	-5.62	11.62	0.92	14.48	-7.17	5.73
13	-0.83	49.57	4.11	52.18	-3.11	43.60
14	-57.33	-1.37	-52.18	-4.15	-43.60	3.08
15	-8.85	8.94	-14.44	-0.79	-5.70	7.28
16	-16.60	-2.20	-19.14	-6.18	-8.72	4.97
17	-8.12	-26.73	-15.28	-19.44	-7.38	-13.05
18	0.07	-3.39	-2.50	-5.81	-0.04	-0.61
19	-4.08	-3.91	-11.87	-11.45	-1.60	-1.33
20	-3.72	-3.80	-9.77	-9.39	-1.03	-0.60
21	-4.64	-4.00	-11.01	-10.53	-1.05	-0.59
22	-4.26	-4.01	-9.38	-8.53	-0.85	-0.50
23	-4.89	-4.74	-10.51	-9.84	-1.73	-1.30
24	-4.14	-3.12	-8.76	-7.23	-1.33	-0.27
25	-1.78	0.75	-5.66	-1.92	-0.24	0.91
26	-1.52	0.97	1.92	5.66	-0.91	0.24
27	2.56	3.87	7.72	8.75	0.27	1.32
28	3.86	4.58	9.84	10.51	1.29	1.73
29	3.69	3.68	8.54	9.39	0.51	0.86
30	3.21	4.16	10.53	11.00	0.59	1.04
31	3.99	3.88	9.35	9.70	0.59	1.01
32	4.05	4.55	11.77	12.21	1.39	1.66
33	3.23	0.60	5.75	2.47	0.60	0.04
34	-24.08	-27.01	-24.00	-16.98	-19.72	-13.07
35	23.12	27.13	24.03	16.97	19.75	13.01

Notes :

1) To be read in conjunction with, Fig S1, 4.16, and 4.17.
2) For strain gauge positions see Appendix C.
3) Bending moments shown are per 1 kN of applied ram load.
4) Experimental co-efficients have been derived from the measured strain gauge values at a ram load of 50 kN, and extrapolated to the ends of the respective member.
5) For definition of theoretical models see Chapter 7.

Table F14 Experimental and theoretical elastic bending moment co-efficients for truss T2.

Member	Bending moment co-efficients (kNmm per 1 kN of applied load)									
	Experimental		S1 model		S2 model		Y model		K model	
	end 1	end 2	end 1	end 2	end 1	end 2	end 1	end 2	end 1	end 2
1	14.90	26.14	20.35	27.19	20.41	27.34	21.76	28.73	23.18	33.46
2	17.83	28.46	16.46	27.49	16.98	28.45	14.91	26.82	19.13	31.62
3	17.78	32.31	17.05	31.28	17.76	31.09	17.61	31.03	19.94	35.00
4	14.62	48.49	14.73	48.07	15.14	50.33	14.99	48.43	17.97	55.62
5	-6.23	7.44	-6.24	6.40	-4.84	4.99	-6.48	6.64	-5.74	5.93
6	48.13	-12.95	-48.23	-14.72	-50.49	-15.14	-48.60	-14.99	-55.80	-17.98
7	31.51	-17.11	-31.25	-16.98	-31.08	-17.71	-30.99	-17.54	-34.98	-19.88
8	28.87	-18.56	-27.53	-16.40	-28.50	-16.92	-26.87	-14.85	-31.66	-19.04
9	25.59	-15.48	-27.26	-20.32	-27.42	-20.38	-28.80	-21.73	-33.53	-23.14
10	29.91	27.27	25.79	26.37	25.95	26.70	25.91	26.33	28.96	30.34
11	18.81	32.21	18.81	31.26	19.63	32.37	19.01	31.45	21.64	35.04
12	14.08	26.95	13.44	27.45	14.10	27.53	13.20	27.79	16.67	34.74
13	14.77	53.07	16.71	57.85	16.81	58.15	16.26	56.62	17.89	59.92
14	57.08	-13.96	-57.86	-16.55	-58.17	-16.66	-56.62	-16.10	-59.85	-17.73
15	25.25	-10.72	-27.60	-13.53	-27.67	-14.20	-27.95	-13.30	-34.92	-16.78
16	31.51	-18.85	-31.14	-18.88	-32.27	-19.73	-31.32	-19.08	-34.90	-21.72
17	27.52	-29.49	-26.26	-25.55	-26.61	-25.72	-26.21	-25.67	-30.20	-28.68
18	2.96	1.74	0.87	0.57	0.77	0.36	0.85	0.51	1.06	0.77
19	0.02	0.45	0.11	0.52	-0.36	-0.04	0.04	0.48	0.44	0.89
20	1.16	1.32	0.66	1.02	0.04	0.31	0.70	1.09	0.93	1.35
21	0.40	0.72	0.62	1.13	-0.31	0.13	0.69	1.16	0.89	1.40
22	1.18	1.54	0.56	0.85	-0.13	0.45	0.53	0.80	0.69	1.02
23	0.27	0.40	-0.50	0.04	-0.45	0.29	-0.51	0.09	-0.19	0.57
24	0.83	1.43	0.26	1.68	-0.29	0.17	0.32	1.69	0.60	2.08
25	1.22	0.49	1.73	2.14	-0.17	1.21	1.69	2.12	1.84	2.22
26	-3.13	-2.28	-2.16	-1.74	-1.21	0.18	-2.14	-1.70	-2.23	-1.85
27	-1.05	-0.60	-1.69	-0.26	-0.18	0.28	-1.70	-0.32	-2.08	-0.60
28	-1.13	-0.91	-0.03	0.49	-0.28	0.45	-0.09	0.05	-0.55	0.19
29	-0.54	-0.13	-0.85	-0.57	-0.45	0.13	-0.81	-0.54	-1.02	-0.71
30	-1.04	-1.56	-1.14	-0.62	-0.13	0.32	-1.17	-0.69	-1.41	-0.89
31	-0.77	-0.41	-1.05	-0.69	-0.32	-0.04	-1.12	-0.73	-1.38	-0.96
32	-0.62	-0.87	-0.54	-0.11	0.04	0.37	-0.50	-0.04	-0.91	-0.45
33	-1.35	-2.56	-0.58	-0.89	-0.37	-0.78	-0.52	-0.87	-0.78	-1.07
34	16.05	-3.88	-20.35	-5.51	-20.41	-5.58	21.76	-5.84	-23.18	-3.12
35	15.52	6.34	20.32	5.28	20.38	5.36	21.73	5.61	23.14	2.85

Notes :

1) To be read in conjunction with, Fig S1, 4.16, and 4.17.
2) For strain gauge positions see Appendix C.
3) Bending moments shown are per 1 kN of applied ram load.
4) Experimental co-efficients have been derived from the measured strain gauge values at a ram load of 50 kN, and extrapolated to the ends of the respective member.
5) For definition of theoretical models see Chapter 7.

Table F15 Experimental and theoretical elastic bending moment co-efficients for truss T3

Member	Bending moment co-efficients (kNmm per 1 kN of applied load)									
	Experimental		S1 model		S2 model		Y model		K model	
	end 1	end 2	end 1	end 2	end 1	end 2	end 1	end 2	end 1	end 2
1	14.23	15.08	15.92	16.10	15.24	14.51	16.09	13.82	17.71	14.99
2	5.58	25.37	7.95	23.98	6.46	23.57	10.96	26.45	12.73	31.91
3	-7.75	7.56	-5.65	5.65	-5.70	5.70	-7.99	7.99	-6.51	6.51
4	-24.77	-5.72	-23.98	-7.95	-23.57	-6.46	-26.45	-10.96	-31.91	-12.73
5	-14.87	-14.97	-16.10	-15.92	-14.51	-15.24	-13.82	-16.09	-14.99	-17.71
6	12.57	3.00	19.02	5.75	18.92	4.68	21.12	12.83	25.03	14.48
7	13.86	5.28	17.03	9.60	15.77	7.53	9.76	5.13	12.54	8.32
8	12.80	54.93	13.26	67.07	11.30	66.07	17.30	61.53	19.74	72.55
9	-48.31	-11.46	-67.07	-13.26	-66.07	-11.30	-61.53	-17.30	-72.55	-19.74
10	-6.60	-13.44	-9.60	-17.03	-7.53	-15.77	-5.13	-9.76	-8.32	-12.54
11	-3.19	-11.20	-5.75	-19.02	-4.68	-18.92	-12.83	-21.12	-14.48	-25.03
12	-1.27	-0.77	-1.24	-1.30	-0.69	-0.20	-1.12	-1.17	-1.04	-1.08
13	0.92	1.13	-1.09	-1.03	0.20	0.15	-1.04	-1.08	-0.94	-0.99
14	-0.76	-1.15	-1.95	-2.32	-0.15	0.03	-1.89	-2.04	-1.73	-1.83
15	0.09	0.62	-1.60	-0.77	-0.03	-0.05	-1.40	-0.77	-1.24	-0.52
16	0.13	0.38	0.17	0.39	-0.05	0.33	-0.03	0.28	0.12	0.38
17	-0.83	-0.54	-0.39	-0.17	-0.33	-0.05	-0.28	0.03	-0.38	-0.12
18	0.24	0.30	0.77	1.60	0.54	0.03	0.77	1.40	0.52	1.24
19	-0.43	-0.50	2.32	1.95	-0.03	0.15	2.04	1.89	1.83	1.73
20	0.04	0.07	1.03	1.09	-0.15	-0.20	1.08	1.04	0.99	0.94
21	0.05	0.77	1.30	1.24	0.20	0.69	1.17	1.12	1.08	1.04
22	-24.17	-12.90	-24.20	-19.02	-24.35	-18.92	-23.97	-21.12	-29.17	-25.03
23	21.67	11.97	24.20	19.02	24.35	18.92	23.97	21.12	29.17	25.03

Notes :

1) To be read in conjunction with, Fig S1, 4.16, and 4.17.
2) For strain gauge positions see Appendix C.
3) Bending moments shown are per 1 kN of applied ram load.
4) Experimental co-efficients have been derived from the measured strain gauge values at a ram load of 200 kN, and extrapolated to the ends of the respective member.
5) For definition of theoretical models see Chapter 7.

Table F16 Experimental and theoretical elastic bending moment co-efficients for truss T4.

Member	Bending moment co-efficients (kNmm per 1 kN of applied load)									
	Experimental		S1 model		S2 model		Y model		K model	
	end 1	end 2	end 1	end 2	end 1	end 2	end 1	end 2	end 1	end 2
1	11.98	13.82	12.72	15.36	11.35	12.45	12.68	14.22	13.27	14.91
2	7.31	22.73	11.62	23.72	8.93	23.14	13.47	24.85	15.16	29.74
3	-5.85	5.97	-4.45	4.45	-4.20	4.20	-5.68	5.68	-4.58	4.58
4	-23.51	-8.38	-23.72	-11.62	-23.14	-8.93	-24.85	-13.47	-29.74	15.16
5	-13.16	-11.25	-15.36	-12.72	-12.45	-11.35	-14.22	-12.68	-14.91	-13.27
6	10.91	9.01	16.54	11.92	16.38	9.85	17.98	16.16	21.25	18.09
7	10.45	7.47	13.87	12.07	11.05	8.30	9.37	7.48	11.25	10.52
8	13.64	56.95	14.56	53.05	11.14	50.88	19.01	59.08	20.52	62.21
9	-47.31	-12.95	-53.05	14.56	-50.88	-11.14	-59.08	-19.01	-62.21	-20.52
10	-8.73	-10.45	-12.07	-13.87	-8.30	-11.05	-7.48	-9.37	-10.52	-11.25
11	-10.68	-11.12	-11.92	-16.54	-9.85	-16.38	-16.16	-17.98	-18.09	-21.25
12	-2.75	-2.49	-2.57	-2.50	-1.55	-0.37	-2.36	-2.32	-2.26	-2.17
13	2.90	3.45	-2.44	-2.17	0.37	0.27	-2.35	-2.20	-2.17	-2.06
14	-3.13	-2.68	-3.27	-3.76	-0.27	0.21	-3.33	-3.72	-3.01	-3.21
15	0.81	0.55	-3.29	-1.32	-0.21	-0.19	-3.44	-1.67	-2.83	-0.85
16	-0.18	2.57	0.70	1.24	0.19	1.00	0.31	1.00	0.69	1.25
17	-2.58	-1.10	-1.24	-0.70	-1.00	-0.19	-1.00	-0.31	-1.25	-0.69
18	0.39	0.98	1.32	3.29	0.19	0.21	1.67	3.44	0.85	2.83
19	1.23	0.86	3.76	3.27	-0.21	0.27	3.72	3.33	3.21	3.01
20	0.28	0.07	2.17	2.44	-0.27	-0.37	2.20	2.35	2.06	2.17
21	0.34	1.49	2.50	2.57	0.37	1.55	2.32	2.36	2.17	2.26
22	-21.30	-12.27	-19.36	-16.54	-19.55	-16.38	-19.22	-17.98	-23.52	-21.25
23	21.52	12.46	19.36	16.54	19.55	16.38	19.22	-17.98	23.52	21.25

Notes :

1) To be read in conjunction with, Fig S1, 4.16, and 4.17.
2) For strain gauge positions see Appendix C.
3) Bending moments shown are per 1 kN of applied ram load.
4) Experimental co-efficients have been derived from the measured strain gauge values at a ram load of 200 kN, and extrapolated to the ends of the respective member.
5) For definition of theoretical models see Chapter 7.

Table F17 Experimental and theoretical elastic bending moment co-efficients for truss T5.

Member	Bending moment co-efficients (kNmm per 1 kN of applied load)									
	Experimental		S1 model		S2 model		Y model		K model	
	end 1	end 2	end 1	end 2	end 1	end 2	end 1	end 2	end 1	end 2
1	18.55	10.62	23.09	13.59	22.55	11.36	23.15	13.44	27.79	16.25
2	10.15	18.32	14.35	18.61	12.27	16.15	13.79	18.14	16.33	21.25
3	3.04	42.79	10.80	40.17	8.32	39.52	12.26	41.20	11.77	43.41
4	-43.06	-4.63	-40.07	-8.27	-39.47	-5.90	-40.71	-9.29	-42.65	-8.17
5	-14.94	-8.37	-14.89	-10.79	-12.29	-8.50	-14.41	-10.00	-17.28	-12.36
6	-8.83	-16.18	-10.36	-23.23	-8.19	-22.78	-10.64	-23.53	-12.61	-26.85
7	25.62	12.24	27.22	15.58	26.31	13.10	28.60	20.50	31.26	21.46
8	9.42	13.23	13.85	17.12	11.36	14.71	9.51	9.42	11.57	15.18
9	2.23	51.32	7.51	60.78	4.95	59.44	13.76	70.37	18.03	79.10
10	-51.23	-4.31	-60.79	-5.92	-59.51	-3.36	-69.68	-11.30	-78.23	-14.39
11	-13.82	-9.74	-13.10	-10.36	10.62	-7.86	-6.84	-6.70	-11.21	-7.54
12	-12.15	25.25	-12.72	-23.71	-10.33	-22.81	-16.67	-24.98	-17.92	-30.40
13	-0.33	1.05	-0.34	-0.61	0.24	0.55	-0.42	-0.65	-0.37	-0.59
14	0.73	0.78	-3.51	-3.63	-0.55	-0.56	-3.33	-3.33	-2.98	-3.04
15	2.55	2.47	-1.31	-1.13	0.56	0.66	-1.08	-0.96	-0.98	-0.82
16	0.66	1.10	-3.75	-3.91	-0.66	-0.53	-3.74	-3.94	-3.20	-3.32
17	2.08	2.05	-0.90	-0.03	0.53	0.68	-1.00	-0.12	-0.89	0.01
18	-0.52	-0.36	0.04	0.01	0.11	0.06	-0.41	-0.62	-0.79	-0.86
19	-0.72	-0.04	0.05	0.96	-0.68	-0.50	0.12	1.03	0.02	0.98
20	2.17	2.83	3.95	3.81	0.50	0.64	3.97	3.80	3.62	3.51
21	0.58	0.71	1.14	1.29	-0.64	-0.53	1.01	1.12	0.95	1.11
22	2.00	2.17	3.62	3.55	0.53	0.48	3.41	3.42	3.35	3.29
23	0.26	0.19	0.76	0.49	-0.48	-0.12	0.79	0.55	0.69	0.40
24	-17.83	-26.69	-23.09	-23.36	-22.55	-23.11	-23.15	-24.74	-27.79	-30.89
25	17.20	24.78	23.23	26.48	22.78	26.38	23.53	27.62	26.85	30.00

Notes :

1) To be read in conjunction with, Fig S1, 4.16, and 4.17.
2) For strain gauge positions see Appendix C.
3) Bending moments shown are per 1 kN of applied ram load.
4) Experimental co-efficients have been derived from the measured strain gauge values at a ram load of 200 kN, and extrapolated to the ends of the respective member.
5) For definition of theoretical models see Chapter 7.

Table F18 Experimental and theoretical elastic bending moment co-efficients for truss T6.

Member	Bending moment co-efficients (kNmm per 1 kN of applied load)									
	Experimental		S1 model		S2 model		Y model		K model	
	end 1	end 2	end 1	end 2	end 1	end 2	end 1	end 2	end 1	end 2
1	27.63	18.34	30.31	21.80	28.84	17.64	30.82	18.16	33.79	21.27
2	8.81	32.08	13.37	31.61	10.47	28.73	17.13	29.01	21.61	32.29
3	-9.65	44.22	2.54	37.13	-0.72	37.13	8.18	42.05	10.89	55.31
4	-22.40	19.88	-11.03	10.99	-11.22	11.18	-19.94	20.07	-16.50	16.58
5	-45.28	2.71	-37.06	-2.75	-37.06	0.53	-42.13	-8.51	-55.38	-11.21
6	-31.04	-9.28	-31.46	-13.40	-28.55	-10.51	-28.75	-17.20	-32.00	-21.63
7	-18.46	-26.97	-21.79	-30.02	-17.64	-28.55	-18.12	-30.49	-21.23	-33.40
8	19.24	1.10	32.71	3.66	32.63	0.74	37.86	12.67	45.06	14.21
9	25.97	16.44	28.70	18.34	26.57	14.12	19.30	24.29	27.71	28.79
10	12.46	31.48	18.01	33.18	13.96	30.37	11.66	12.64	14.25	21.68
11	-12.38	86.85	-0.66	87.79	-4.30	85.97	18.81	117.90	21.85	124.66
12	-90.65	-0.83	-87.77	0.55	-85.95	4.16	-117.91	-19.10	-124.66	-22.16
13	-30.64	-10.96	-33.00	-18.04	-30.22	-13.97	-12.26	-11.58	-21.33	-14.16
14	-17.41	-23.06	-18.37	-28.56	-14.15	-26.41	-24.41	-19.04	-28.87	-27.40
15	-0.54	-17.37	-3.87	-32.56	-0.93	-32.48	-13.00	-37.79	-14.56	-44.97
16	-0.87	-0.99	-2.04	-2.33	-1.00	-0.21	-2.01	-2.46	-1.72	-2.05
17	2.48	1.93	-2.87	-2.91	0.21	0.19	-3.09	-3.13	-2.37	-2.47
18	-2.43	-1.73	-3.88	-4.19	-0.19	0.02	-3.41	-3.21	-2.91	-2.77
19	1.91	1.73	-3.81	-2.90	-0.02	0.08	-3.04	-2.85	-2.77	-2.54
20	-2.39	-1.33	-3.02	-3.44	-0.84	0.19	-3.66	-3.83	-3.14	-3.12
21	1.57	0.90	-2.90	-1.31	-0.19	-0.26	-3.65	-2.33	-2.91	-1.42
22	-0.21	1.62	0.65	1.03	0.26	0.84	-0.28	0.40	0.11	0.67
23	-1.93	-1.10	-1.03	-0.66	-0.85	-0.26	-0.40	0.28	-0.67	-0.11
24	0.15	0.41	1.30	2.89	0.26	0.20	2.32	3.63	1.42	2.90
25	-0.53	-0.05	3.41	2.99	-0.20	0.08	3.80	3.63	3.09	2.82
26	0.50	0.36	2.96	3.89	-0.08	0.03	2.90	3.09	2.60	2.82
27	-0.74	0.16	4.14	3.82	-0.29	0.18	3.14	3.34	2.71	2.85
28	0.28	0.11	2.96	2.93	-0.18	-0.20	3.18	3.16	2.51	2.43
29	0.27	1.01	2.30	2.02	0.20	0.99	2.43	1.99	2.03	1.70
30	-44.34	-14.20	-40.41	-32.71	-40.92	-32.63	-39.77	-37.86	-50.82	-45.06
31	40.90	12.51	40.16	32.56	40.65	32.48	39.47	37.79	50.45	44.97

Notes :

1) To be read in conjunction with, Fig S1, 4.16, and 4.17.
2) For strain gauge positions see Appendix C.
3) Bending moments shown are per 1 kN of applied ram load.
4) Experimental co-efficients have been derived from the measured strain gauge values at a ram load of 200 kN, and extrapolated to the ends of the respective member.
5) For definition of theoretical models see Chapter 7.

Table F19 Measured axial forces and bending moments at ram failure load for trusses T1 & T2.

	T1			T2		
Member	Axial force kN	Bending moments kNmm end 1	Bending moments kNmm end 2	Axial force kN	Bending moments kNmm end 1	Bending moments kNmm end 2
1	-4	4262	-1115	5	2985	4694
2	119	2655	1578	160	2658	5372
3	235	-530	6372	321	2240	6260
4	369	-4704	5524	483	1756	9395
5	493	-4674	5725	651	-1922	1964
6	351	-5084	6392	487	-8841	-873
7	241	-8719	-649	321	-6712	-2553
8	120	-650	-2494	158	-5304	-2524
9	-4	773	-4613	6	-4619	-3221
10	-64	6365	1111	-76	5139	4615
11	-175	-323	5740	-238	3232	5344
12	-288	-5492	2287	-398	2628	4000
13	-397	-1561	6002	-522	3340	5813
14	-399	-6943	2096	-517	-8142	-5221
15	-271	-2338	4999	-407	-2475	-1030
16	-178	-5473	852	-239	-5140	-3138
17	-64	-1743	-6952	-76	-4767	-5354
18	81	4	-332	110	585	436
19	-76	-205	-442	-108	-211	-171
20	83	-468	-414	110	396	461
21	-79	-341	-483	-110	-151	-15
22	86	-495	-210	112	247	437
23	-92	-238	-188	-108	-43	74
24	84	-325	197	105	289	374
25	-91	22	-120	-121	-36	19
26	-90	-338	259	-123	-525	-208
27	86	138	136	101	-233	-244
28	-93	-224	574	-110	-240	-86
29	83	597	415	109	258	97
30	-76	371	490	-113	-83	-193
31	83	497	322	107	-249	-118
32	-82	320	87	-113	6	-110
33	78	293		107	-109	-467
34	-66	-3954	-6470	-85	-2736	-1140
35	-64	4535	7109	-83	3026	1803

Note :
1) To be read in conjunction with Figs S2, 4.16, and 4.17.

Table F20 Measured axial forces and bending moments at ram failure load for trusses T3 & T4.

	T3			T4		
Member	Axial force kN	Bending moments kNmm end 1	Bending moments kNmm end 2	Axial force kN	Bending moments kNmm end 1	Bending moments kNmm end 2
1	102	8613	8250	131	12039	10218
2	258	-309	13022	310	-2145	13123
3	395	-6603	6307	466	-6257	5390
4	254	-12486	-456	313	-15028	-717
5	98	-6884	-9054	126	-8353	-12072
6	-27	5696	-3363	-20	10296	-4292
7	-179	9778	-3074	-209	14130	-1520
8	-320	9443	21504	-362	-717	13193
9	-314	-18765	-7622	-362	-25959	11800
10	-180	1218	-9345	-219	90	-13009
11	-21	3382	-5834	-22	3347	-10158
12	-172	-587	-622	-202	-1168	-1134
13	192	0	0	193	1569	1670
14	-184	-341	-688	-211	-981	-807
15	144	710	751	182	1910	1939
16	-169	-388	12	-226		
17	-177	-95	-299	-222	-727	-383
18	150	-366	-152	190	-1512	-721
19	-184	-438	-528	-218	426	-118
20	192	0	0	221	-820	-260
21	-175	-278	335	-212	-292	623
22	-13	-12006	-5596	-13	-15662	-8310
23	-16	10997	5712	-15	15162	8611

Note :
1) To be read in conjunction with Figs S2, 4.16, and 4.17.

Table F21 Measured axial forces and bending moments at ram failure load for trusses T5 & T6.

T5				T6			
Member	Axial force kN	Bending moments kNmm end 1	kNmm end 2	Member	Axial force kN	Bending moments kNmm end 1	kNmm end 2
1	28	9441	929	1	183	30317	10651
2	164	6007	9347	2	361	2973	31639
3	289	-4289	17269	3	582	-20902	37312
4	294	-17366	2772	4	744	-24770	19944
5	155	-7072	-4467	5	572	-36397	8303
6	24	-884	-7939	6	355	-24889	-6895
				7	190	-9564	-27922
7	-166	11692	1432				
8	-288	5418	7154	8	12	25958	-8718
9	-399	-1492	14261	9	-252	27458	772
10	-380	-16346	652	10	-443	13994	17691
11	-293	-7687	-4651	11	-648	17192	69682
12	-161	-1670	-10451	12	-642	-83003	-34553
				13	-483	-16245	-11449
13	202	-212	-50	14	-280	-4885	-23530
14	-127	113	54	15	-7	6364	-21342
15	192	149	434				
16	-125	-166	356	16	-209	-132	-847
17	200	330	81	17	189	1830	1827
				18	-217	-2040	-1285
18	-306	-704	686	19	202	1617	1437
				20	-224	-1893	-1916
19	166	56	-307	21	207	2712	2662
20	-119	499	915	22	-257	-824	300
21	192	0	0	23	-251	-870	474
22	-131	672	819	24	201	-1629	-998
23	187	-46	-11	25	-239	-256	523
				26	223	-1510	-1233
24	-157	-8503	-11483	27	-220	-152	525
25	-149	7592	9823	28	218	-1475	-1221
				29	-218	351	285
				30	-54	-31454	-5784
				31	-57	26154	2427

Note :
1) To be read in conjunction with Figs S2, 4.16, and 4.17.

APPENDIX G

EXPERIMENTAL AND THEORETICAL ELASTIC BENDING MOMENT DISTRIBUTION

(the bending moment diagrams have been plotted on the side of the member where the stress induced by the bending moment is tensile)

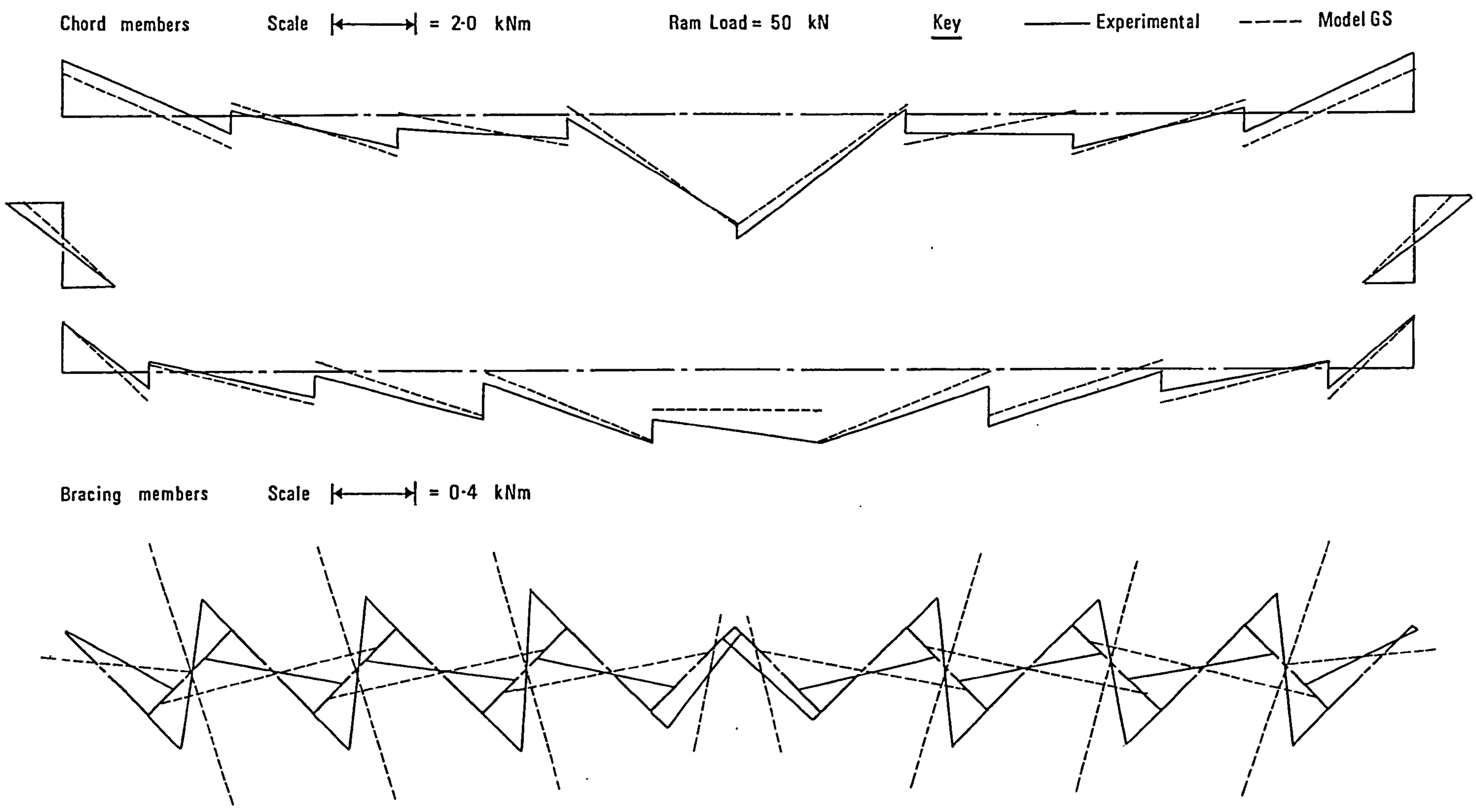

Fig G1(a) Truss T1 : Comparison of experimental and theoretical (model GS) elastic bending moment distributions.

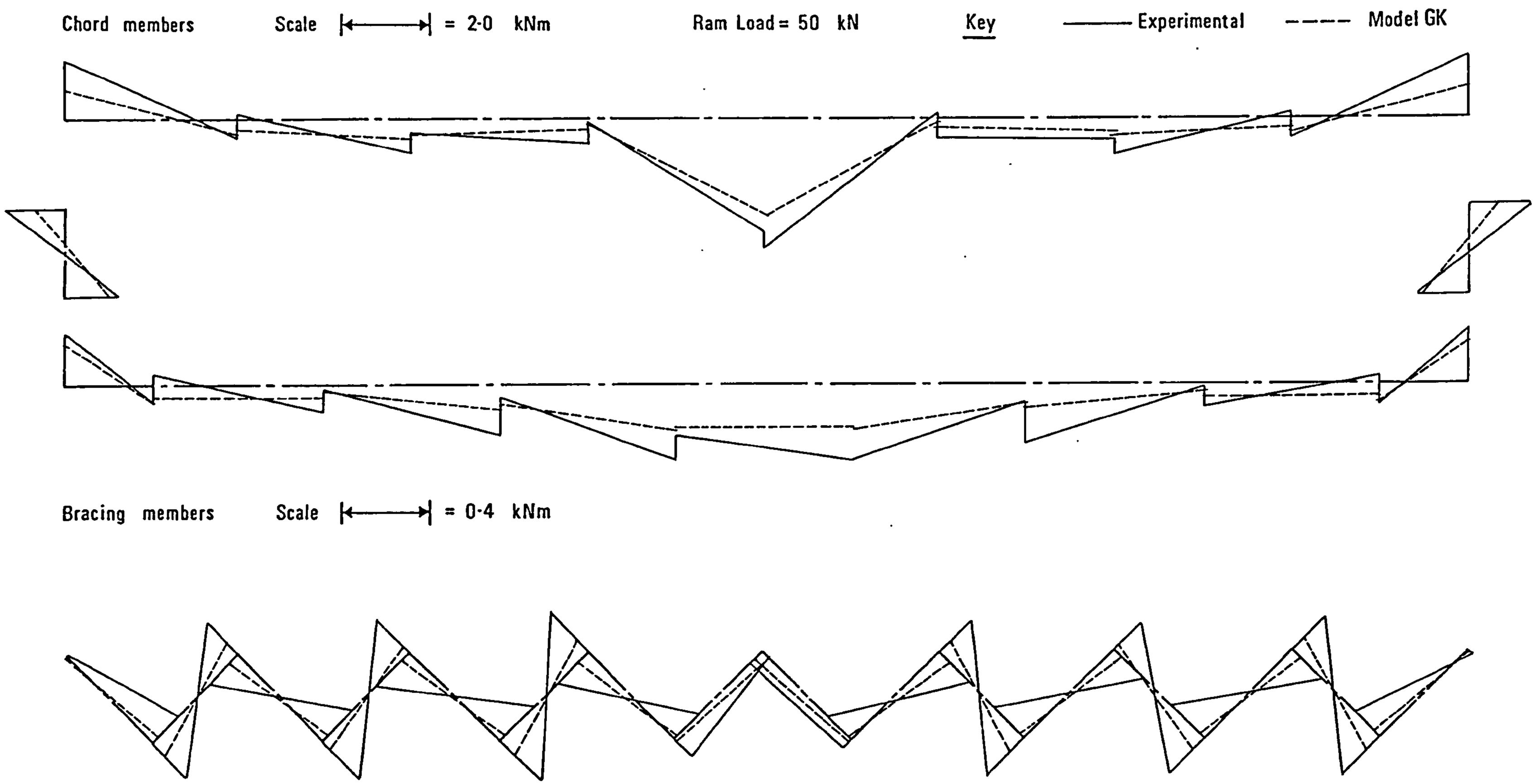

Fig G1(b) Truss T1 : Comparison of experimental and theoretical (model Gk) elastic bending moment distributions.

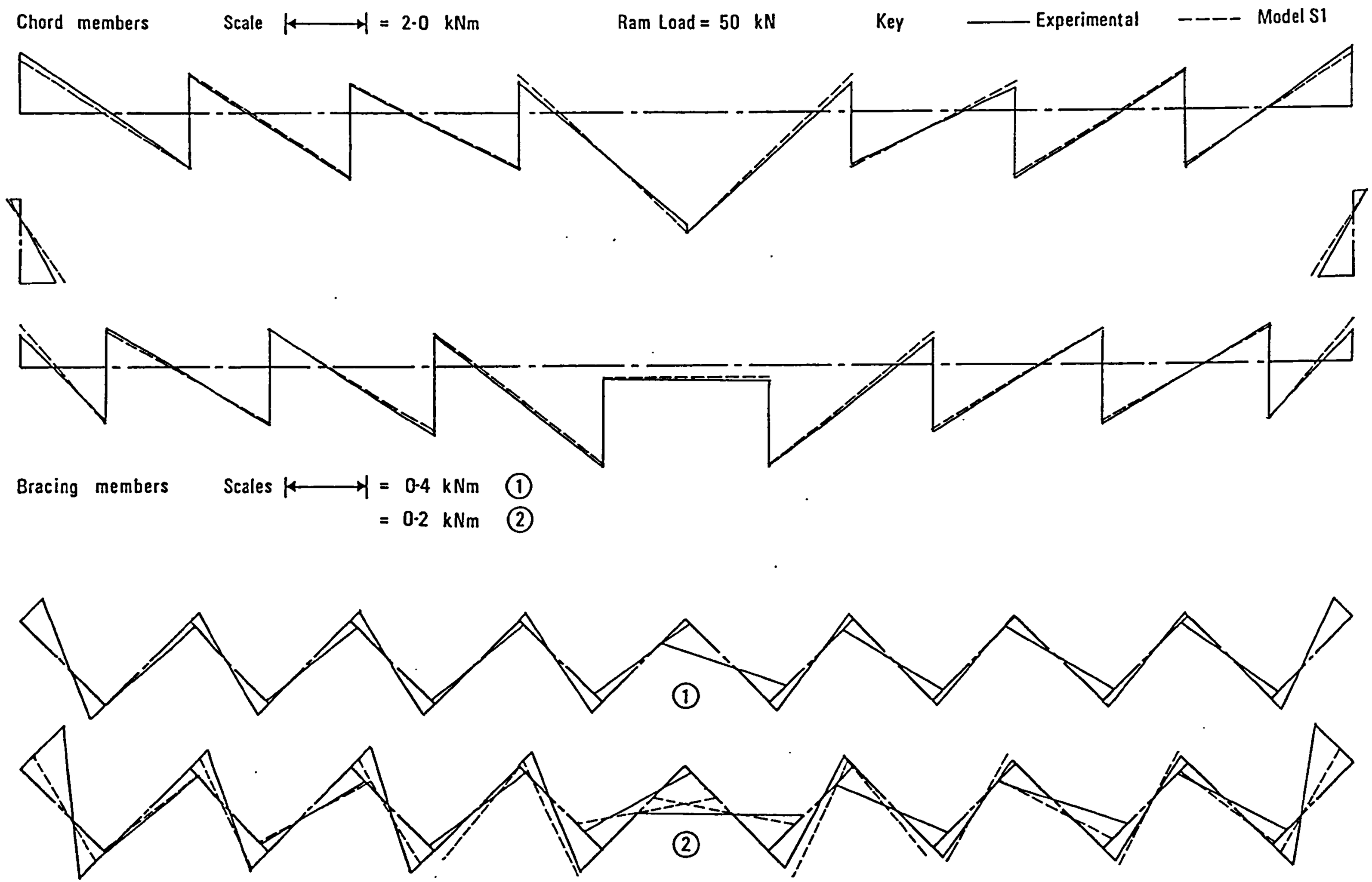

Fig G2(a) Truss T2 : Comparison of experimental and theoretical (model S1) elastic bending moment distributions.

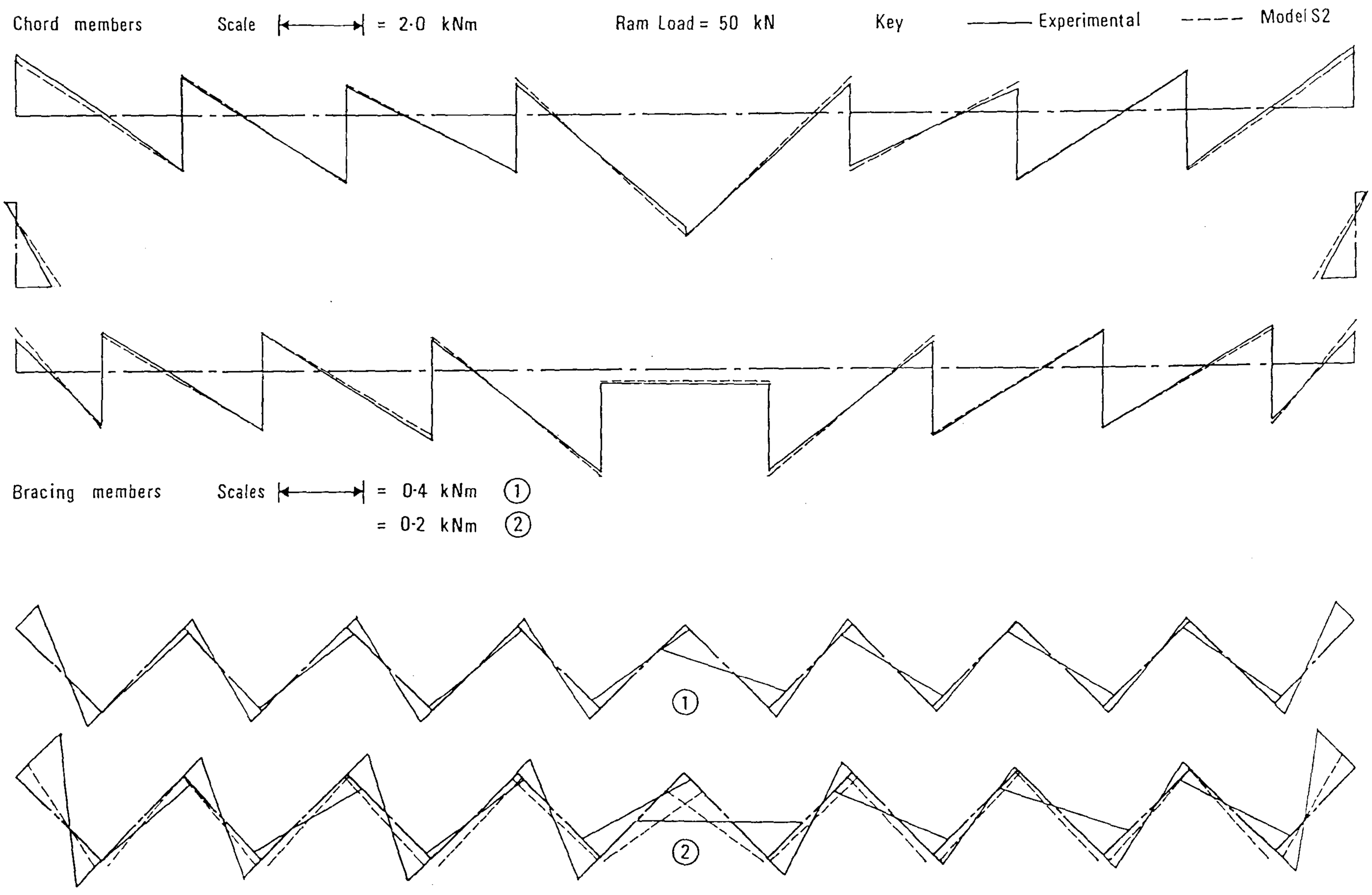

Fig G2(b) Truss T2 : Comparison of experimental and theoretical (model S2) elastic bending moment distributions.

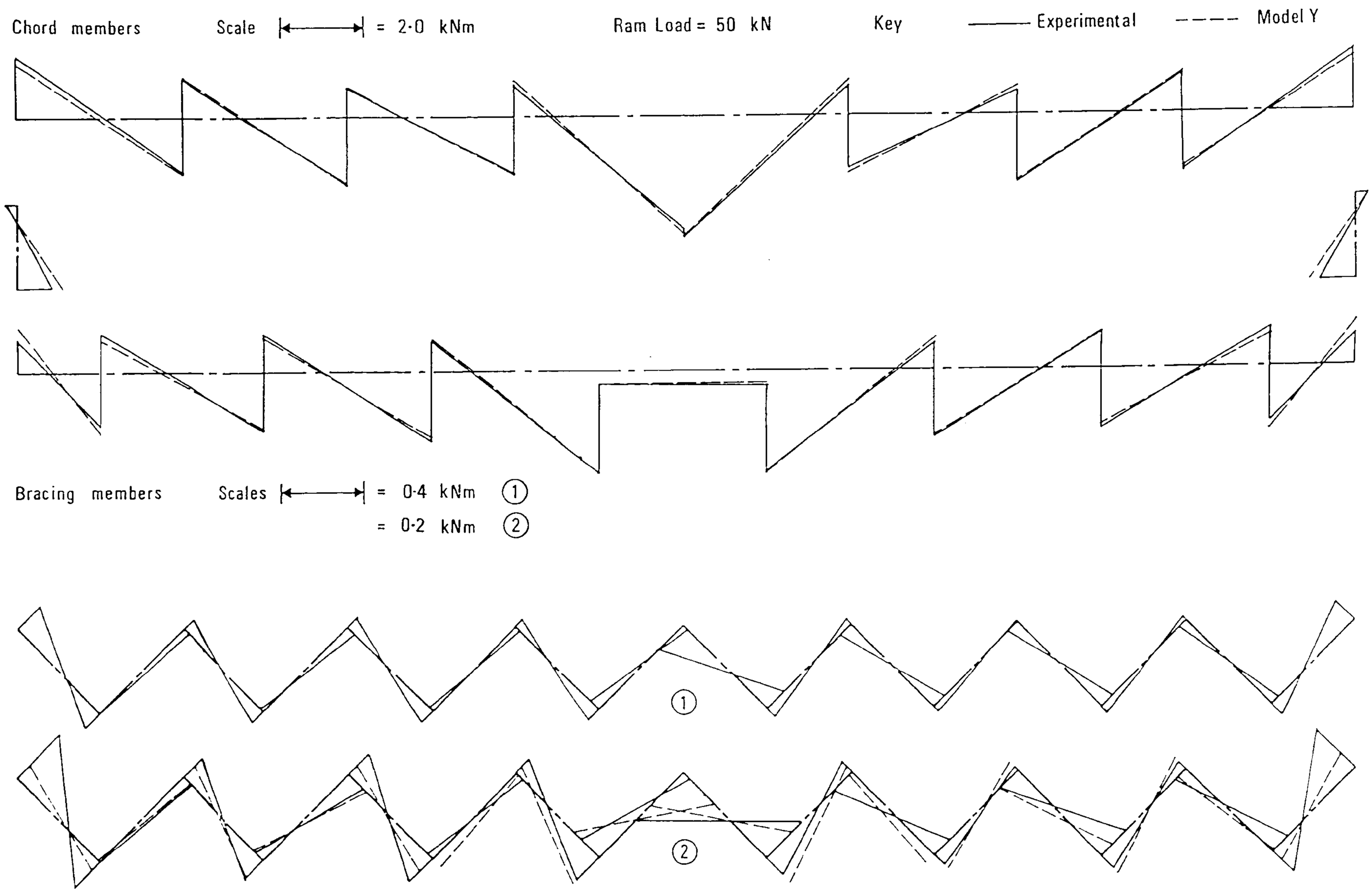

Fig G2(c) Truss T2 : Comparison of experimental and theoretical (model Y) elastic bending moment distributions.

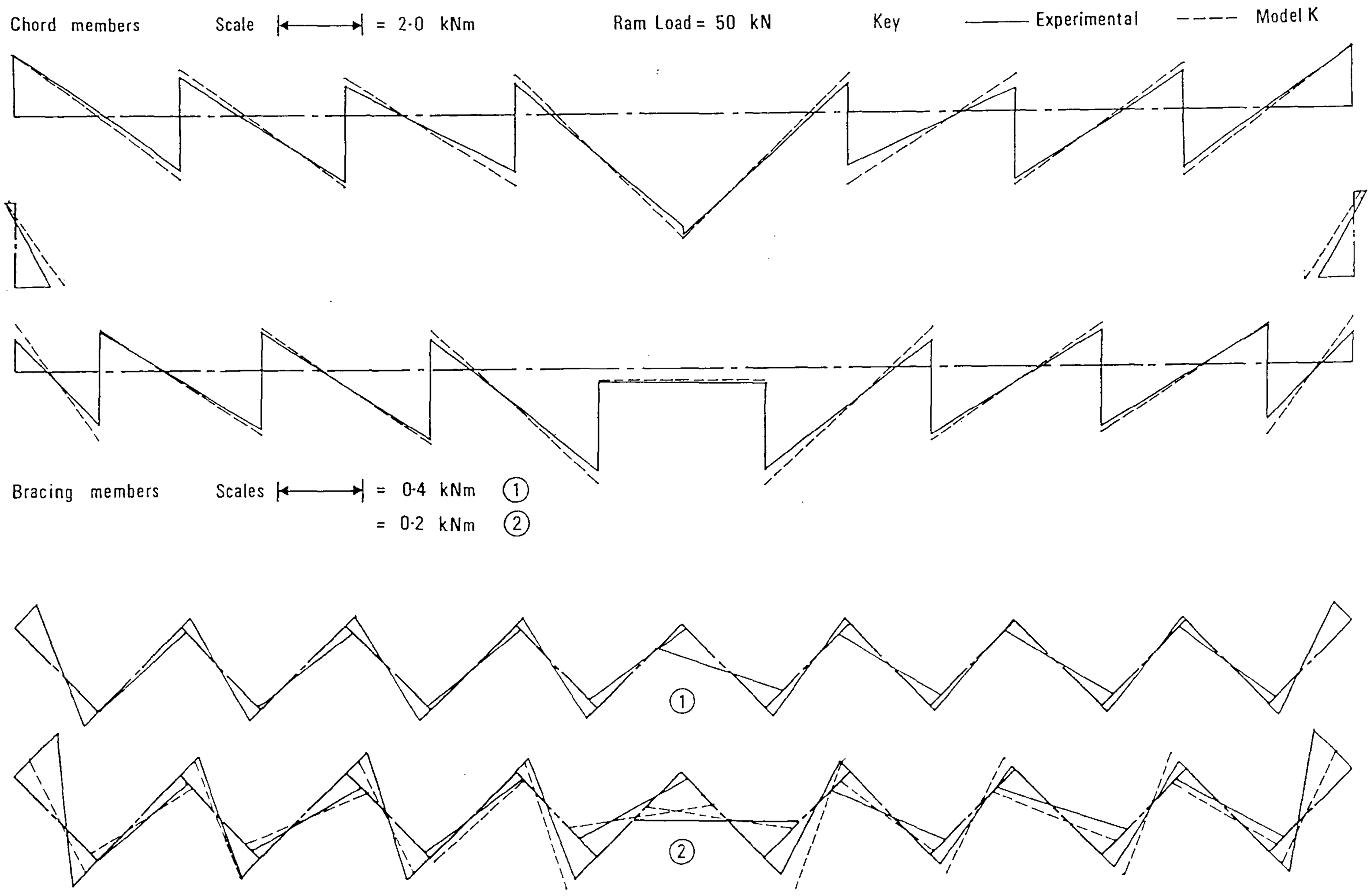

Fig G2(d) Truss T2 : Comparison of experimental and theoretical (model K) elastic bending moment distributions.

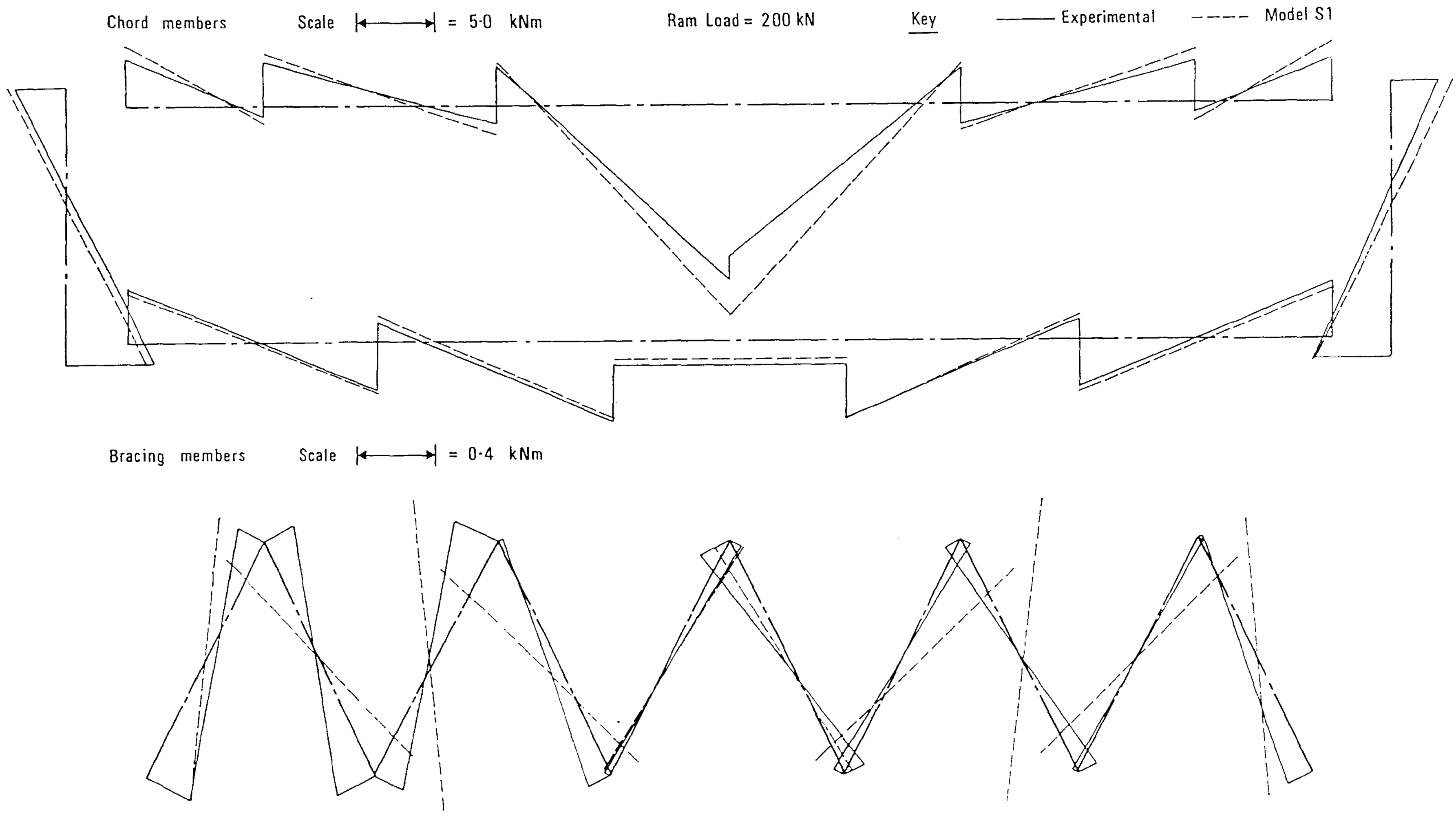

Fig G3(a) Truss T3 : Comparison of experimental and theoretical (model S1) elastic bending moment distributions.

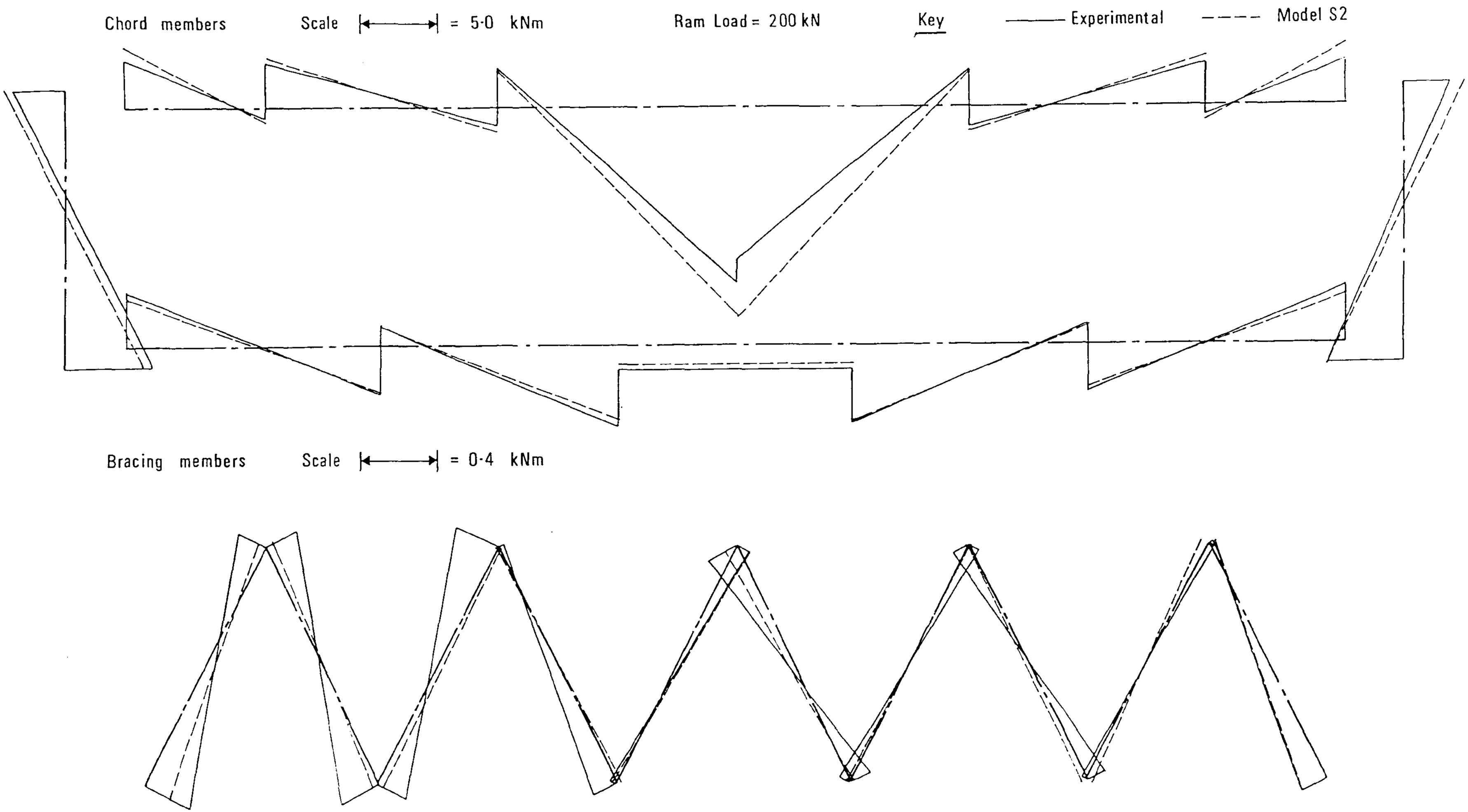

Fig G3(b) Truss T3 : Comparison of experimental and theoretical (model S2) elastic bending moment distributions.

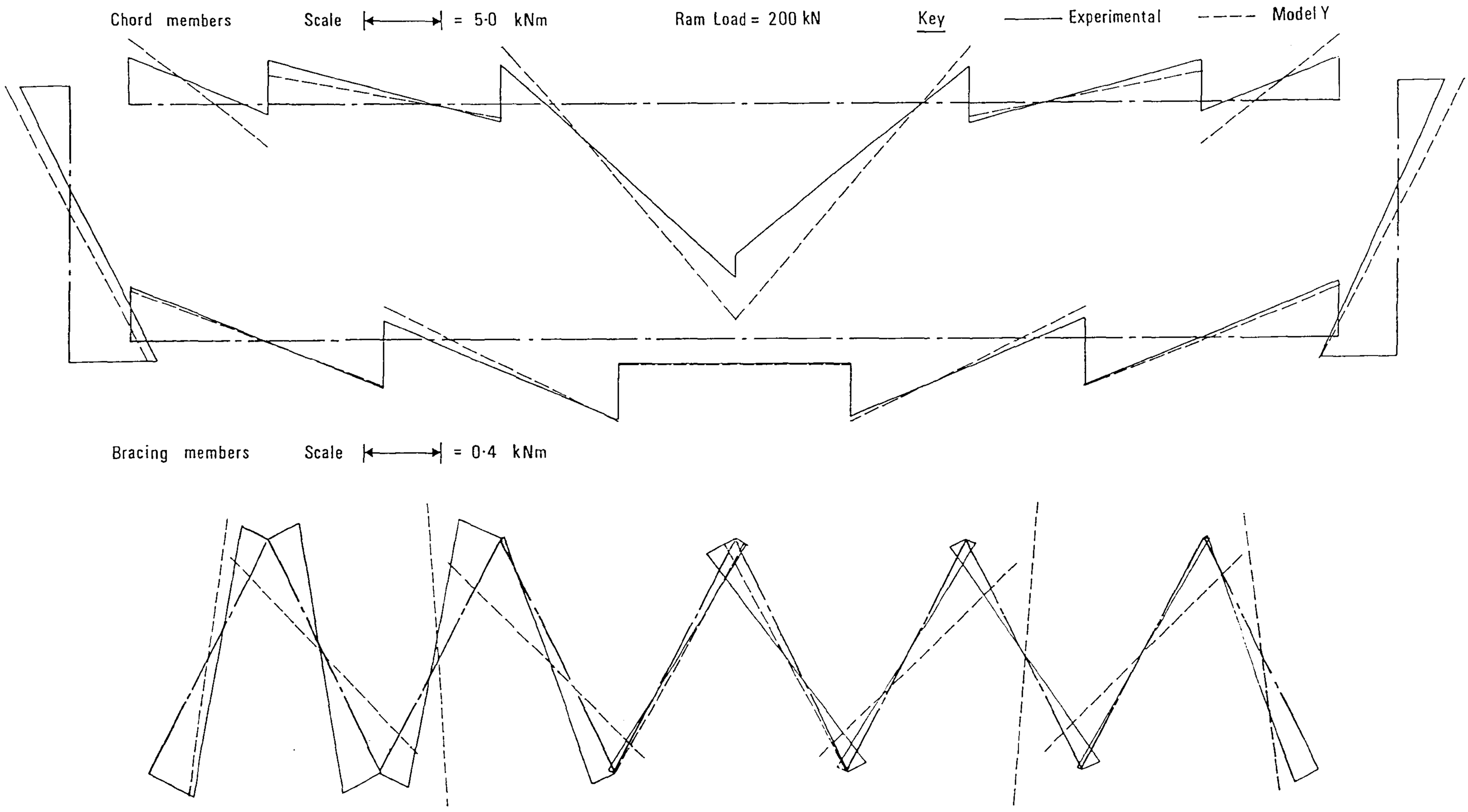

Fig G3(c) Truss T3 : Comparison of experimental and theoretical (model Y) elastic bending moment distributions.

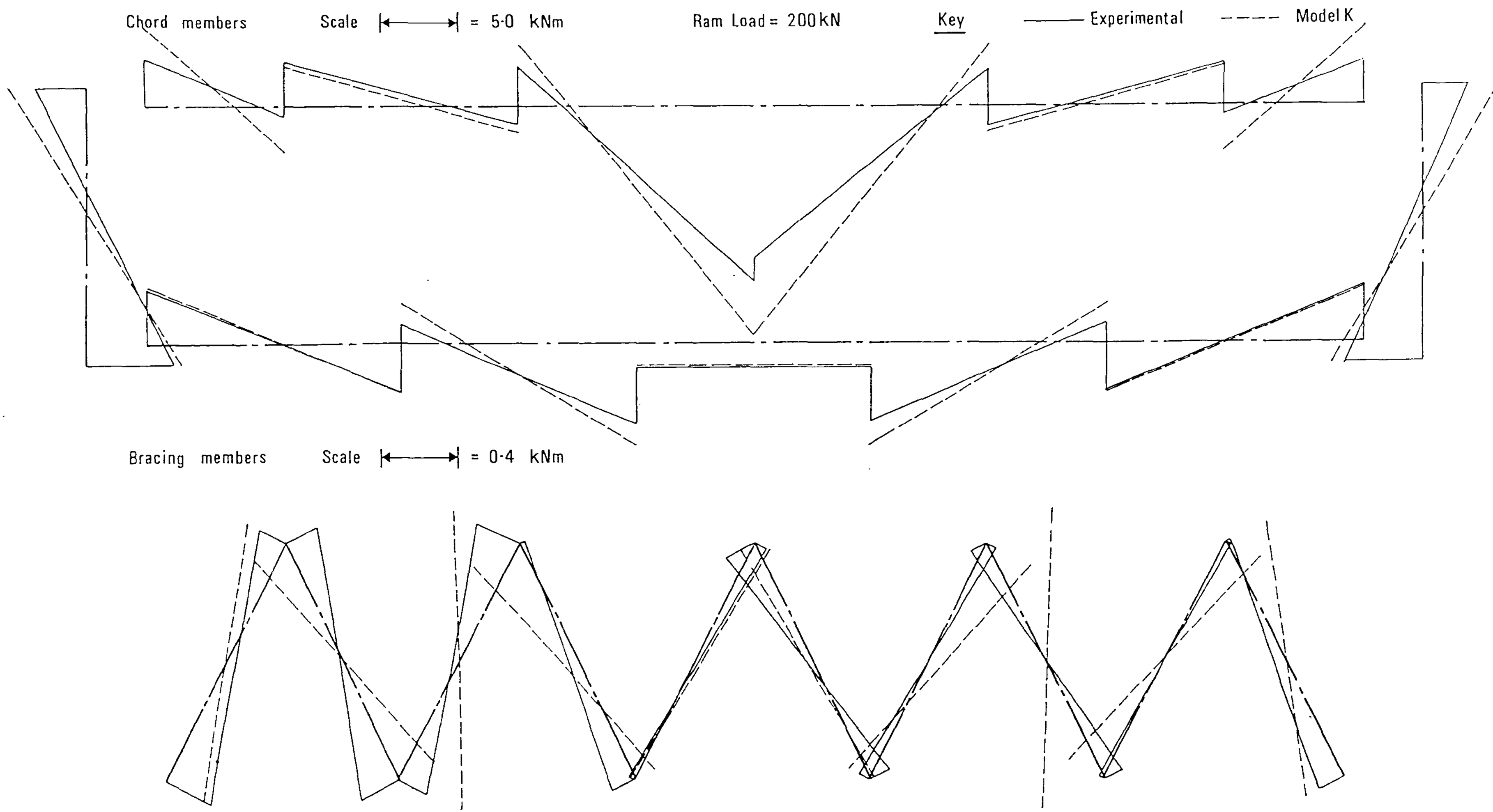

Fig G3(d) Truss T3 : Comparison of experimental and theoretical (model K) elastic bending moment distributions.

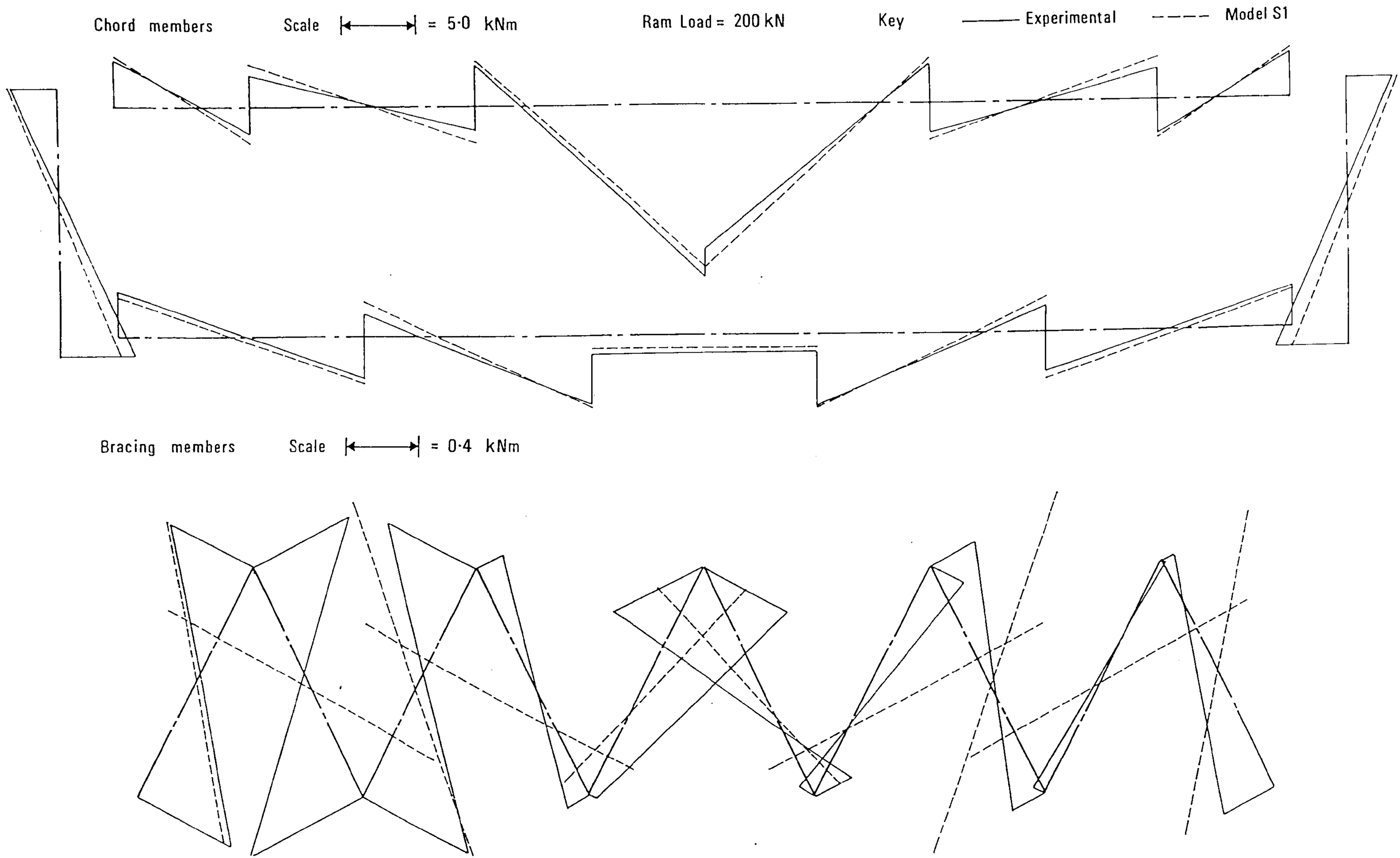

Fig G4(a) Truss T4 : Comparison of experimental and theoretical (model S1) elastic bending moment distributions.

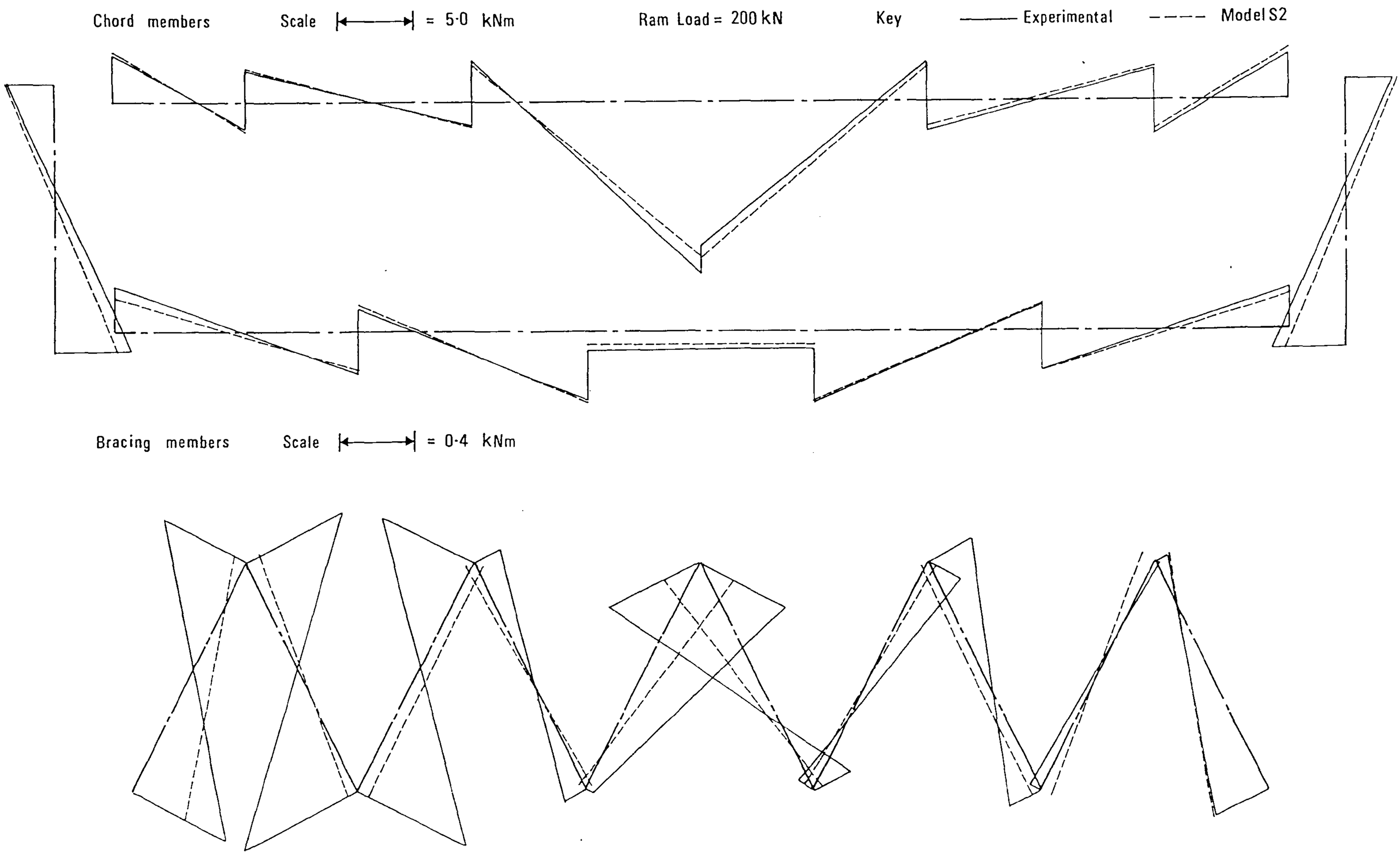

Fig G4(b) Truss T4 : Comparison of experimental and theoretical (model S2) elastic bending moment distributions.

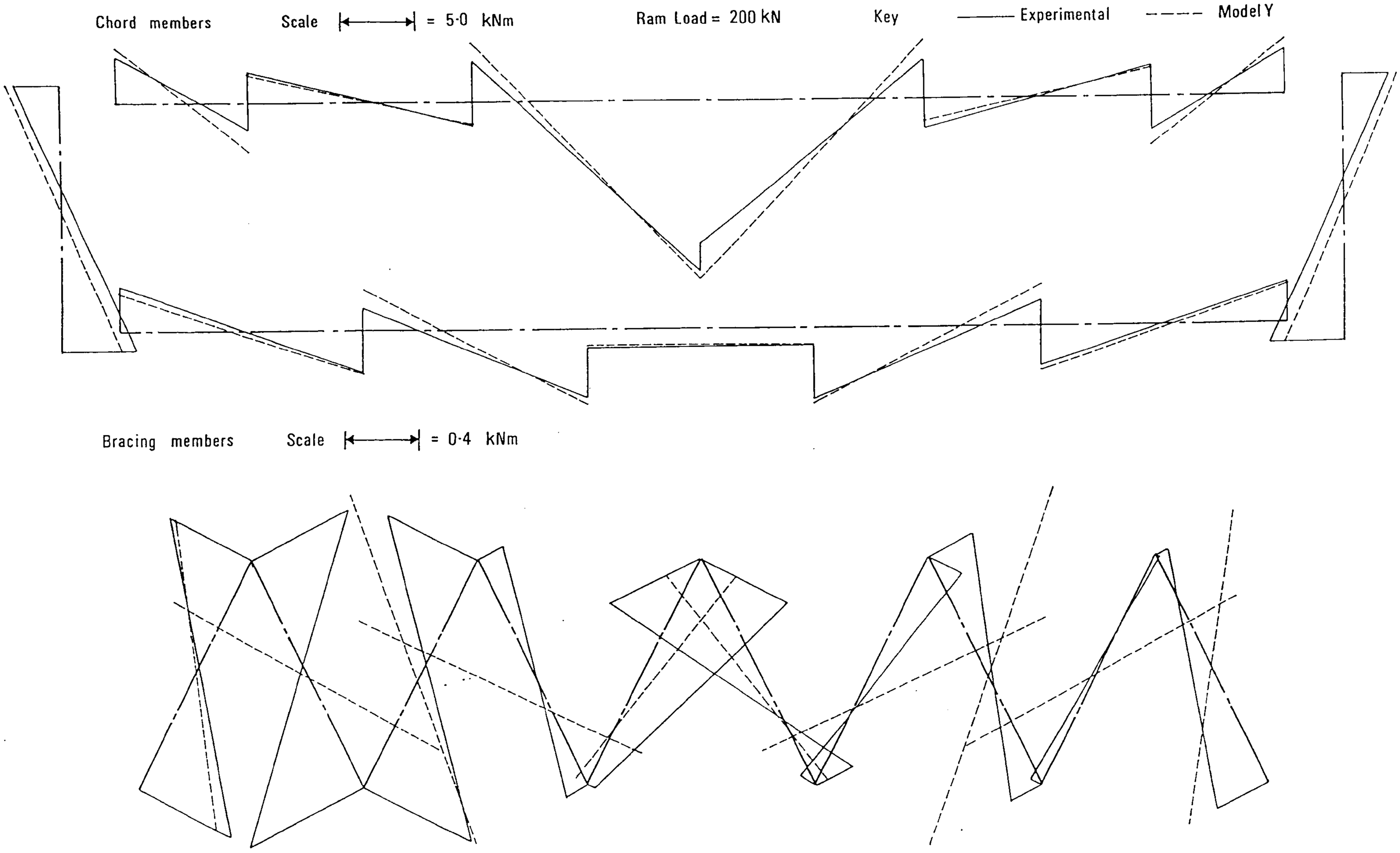

Fig G4(c) Truss T4 : Comparison of experimental and theoretical (model Y) elastic bending moment distributions.

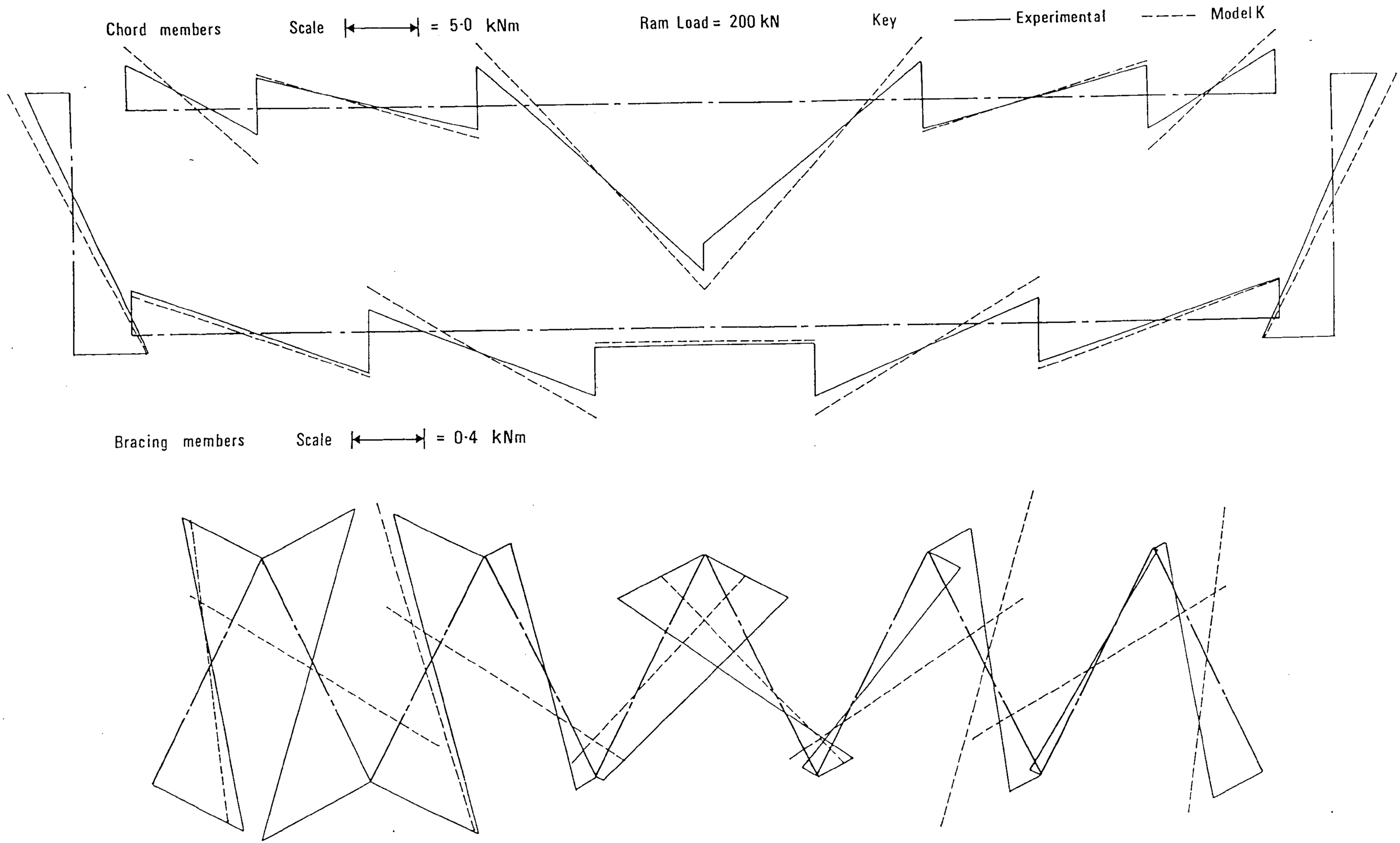

Fig G4(d) Truss T4 : Comparison of experimental and theoretical (model K) elastic bending moment distributions.

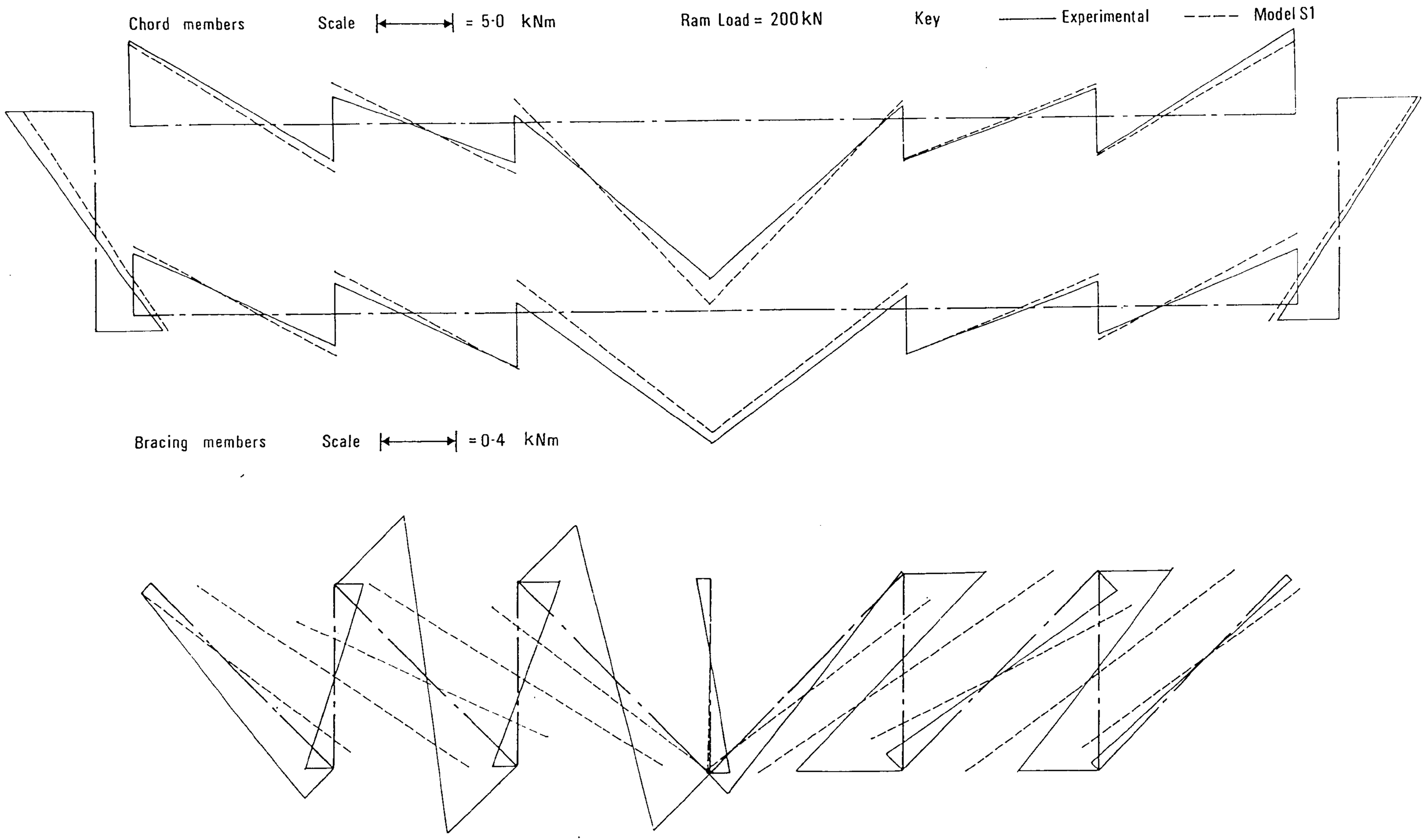

Fig G5(a) Truss T5 : Comparison of experimental and theoretical (model S1) elastic bending moment distributions.

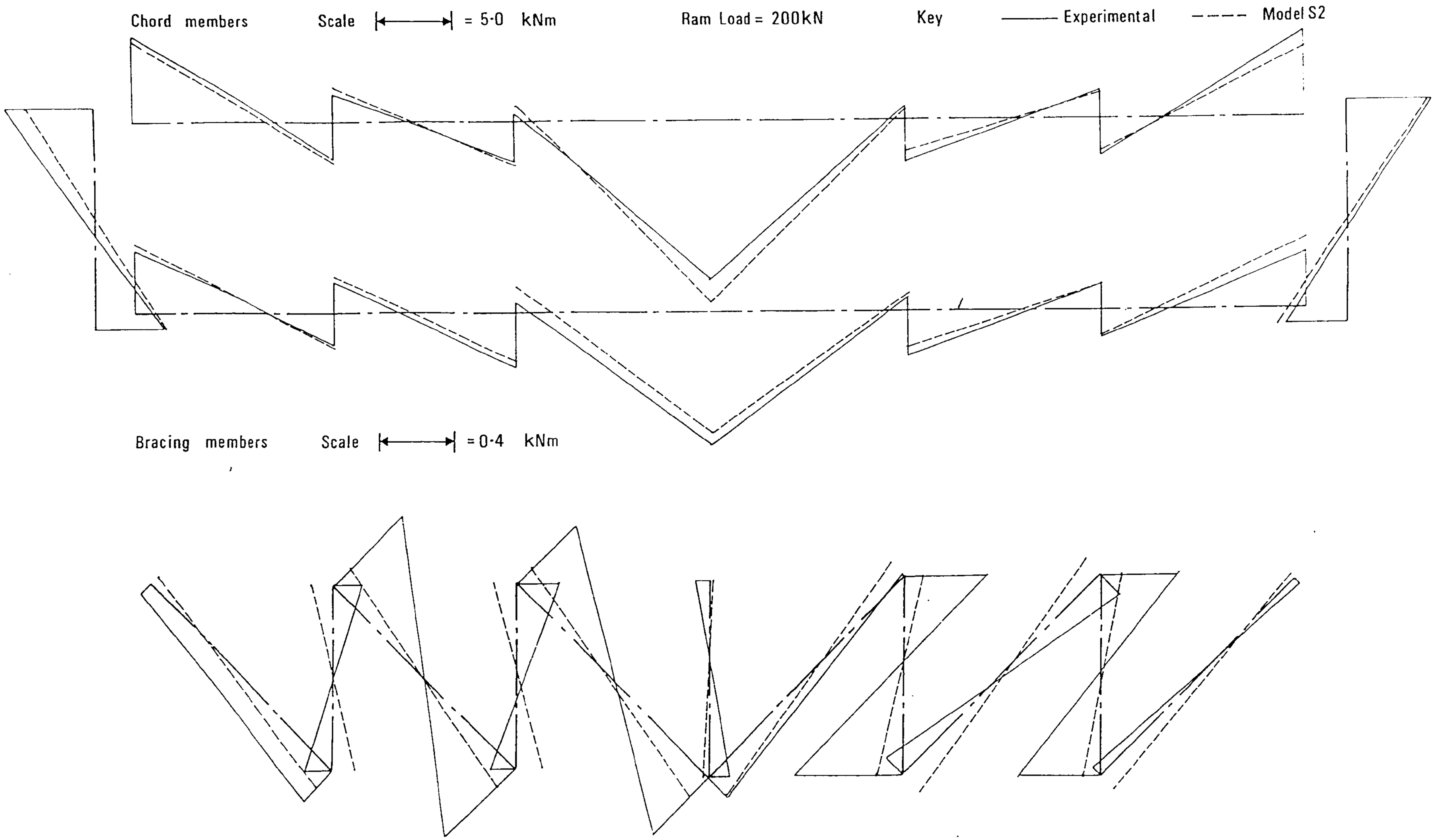

Fig G5(b) Truss T5 : Comparison of experimental and theoretical (model S2) elastic bending moment distributions.

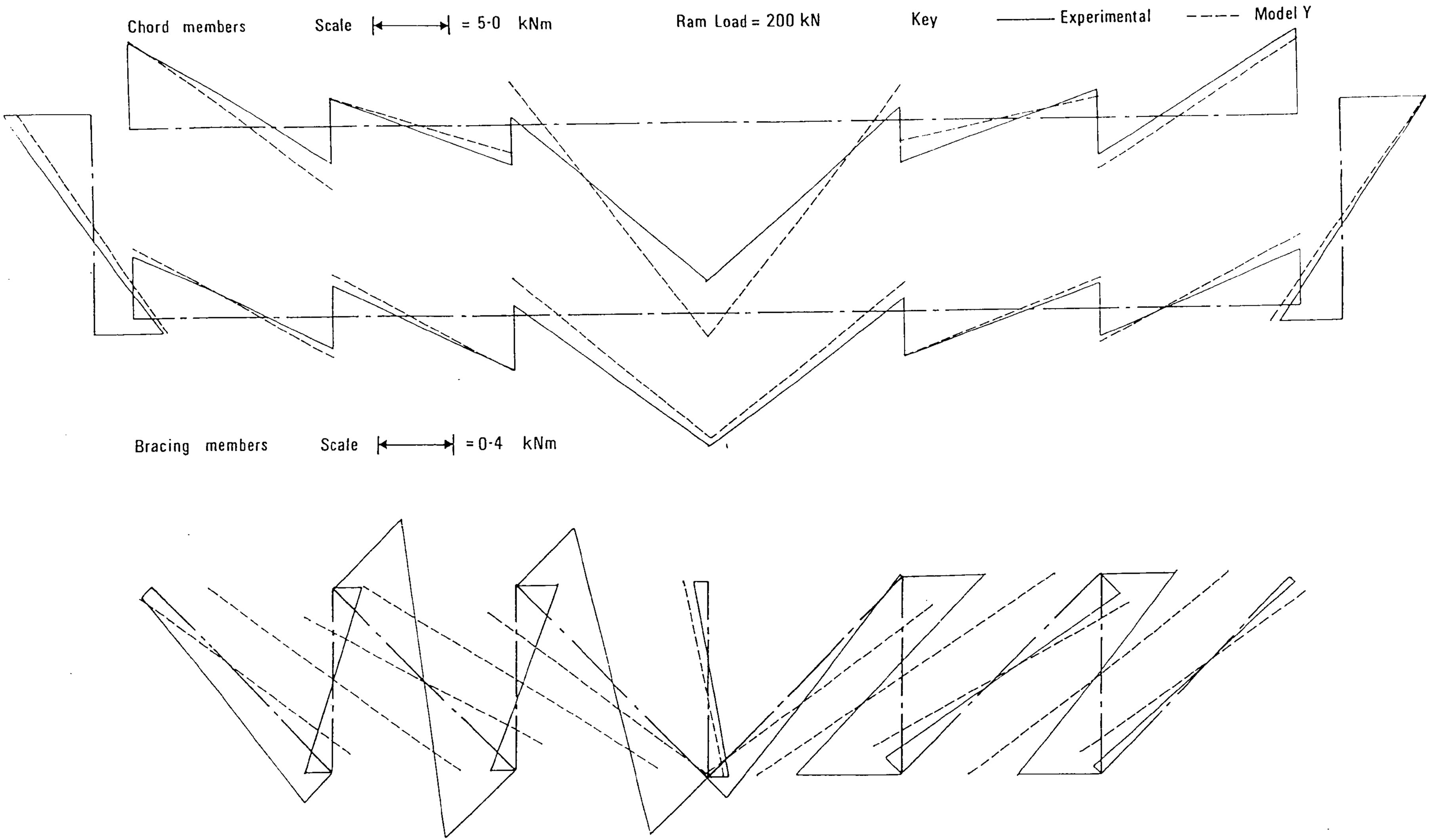

Fig G5(c) Truss T5 : Comparison of experimental and theoretical (model Y) elastic bending moment distributions.

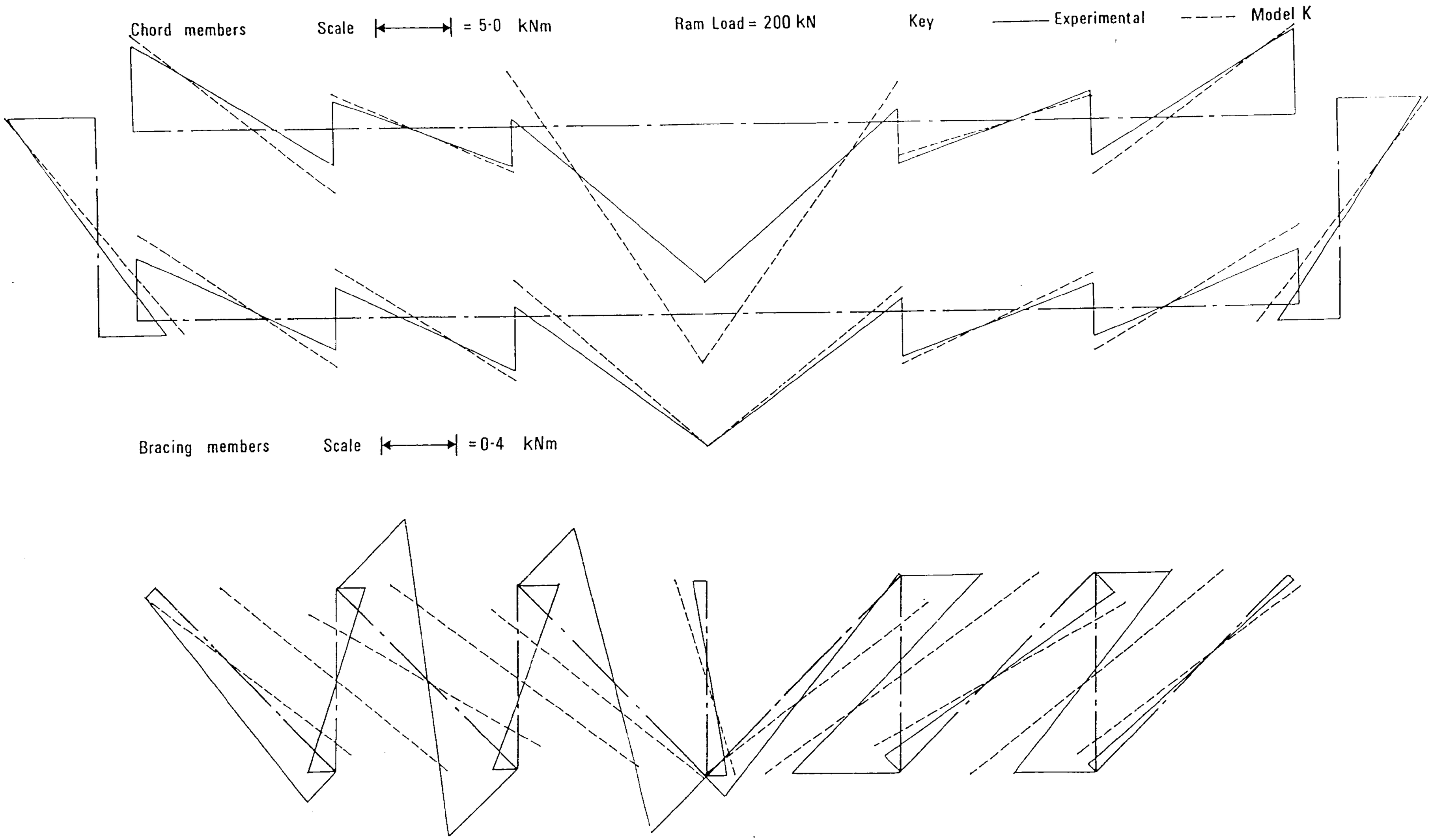

Fig G5(d) Truss T5 : Comparison of experimental and theoretical (model K) elastic bending moment distributions.

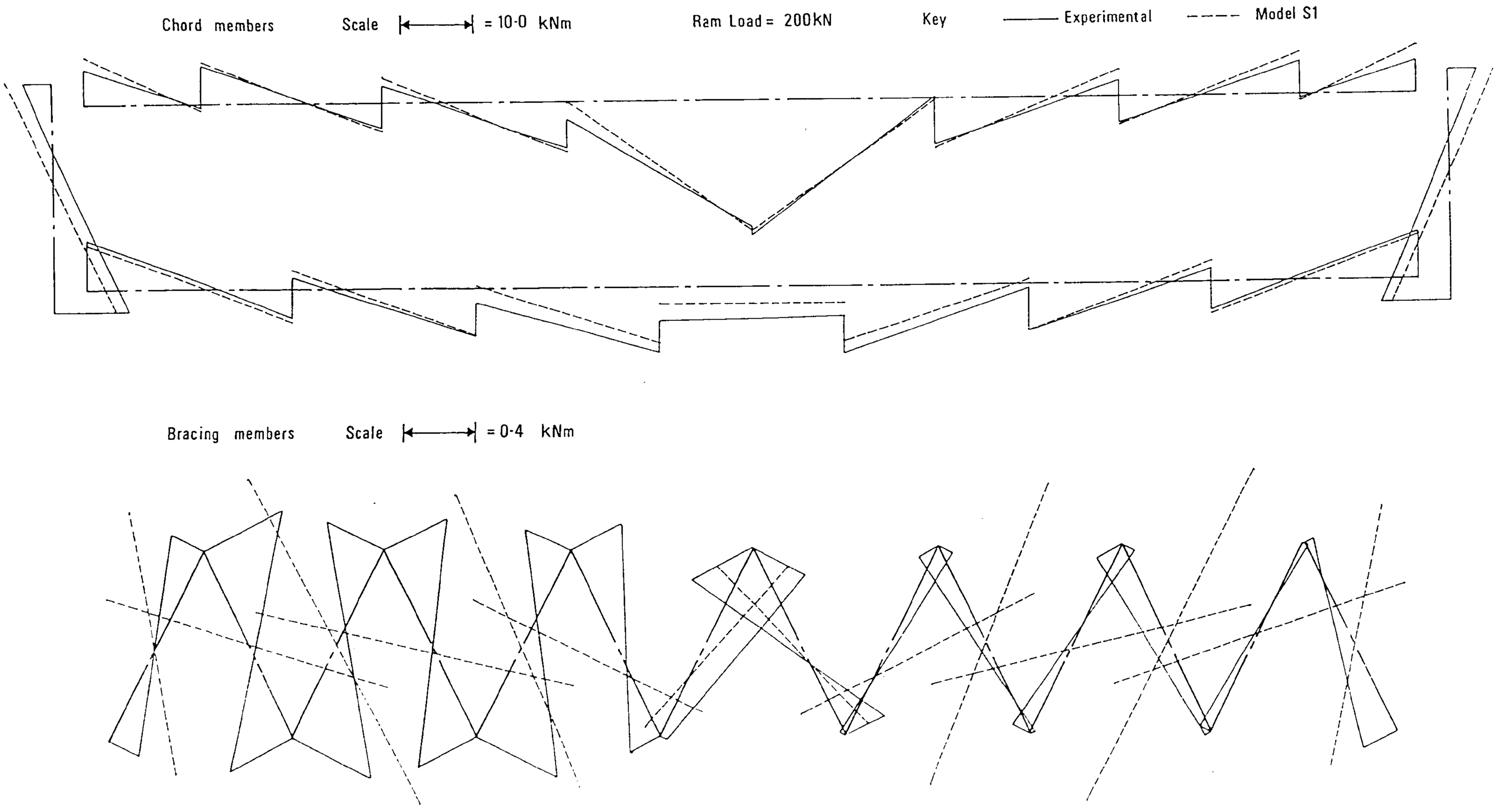

Fig G6(a) Truss T6 : Comparison of experimental and theoretical (model S1) elastic bending moment distributions.

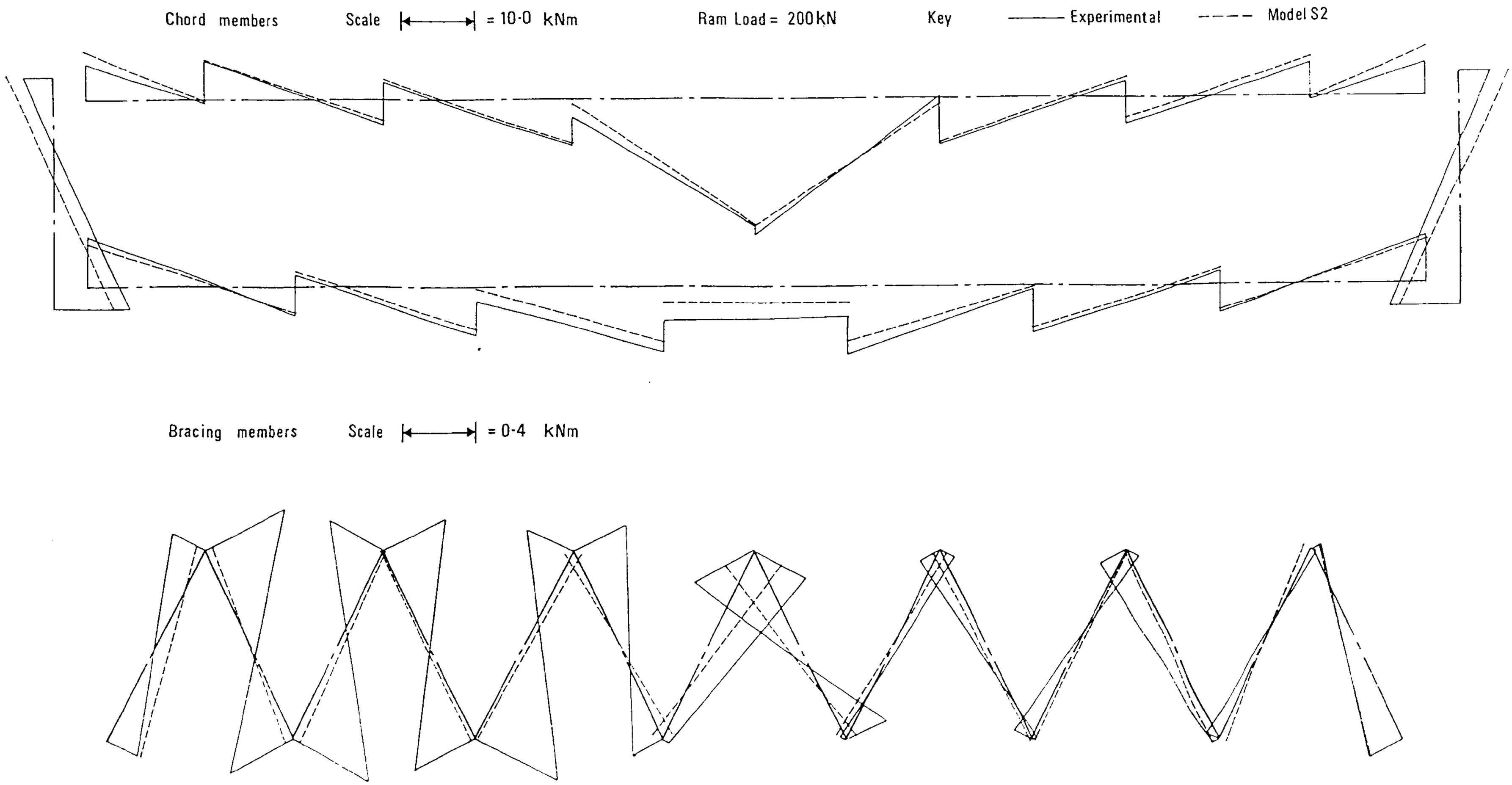

Fig G6(b) Truss T6 : Comparison of experimental and theoretical (model S2) elastic bending moment distributions.

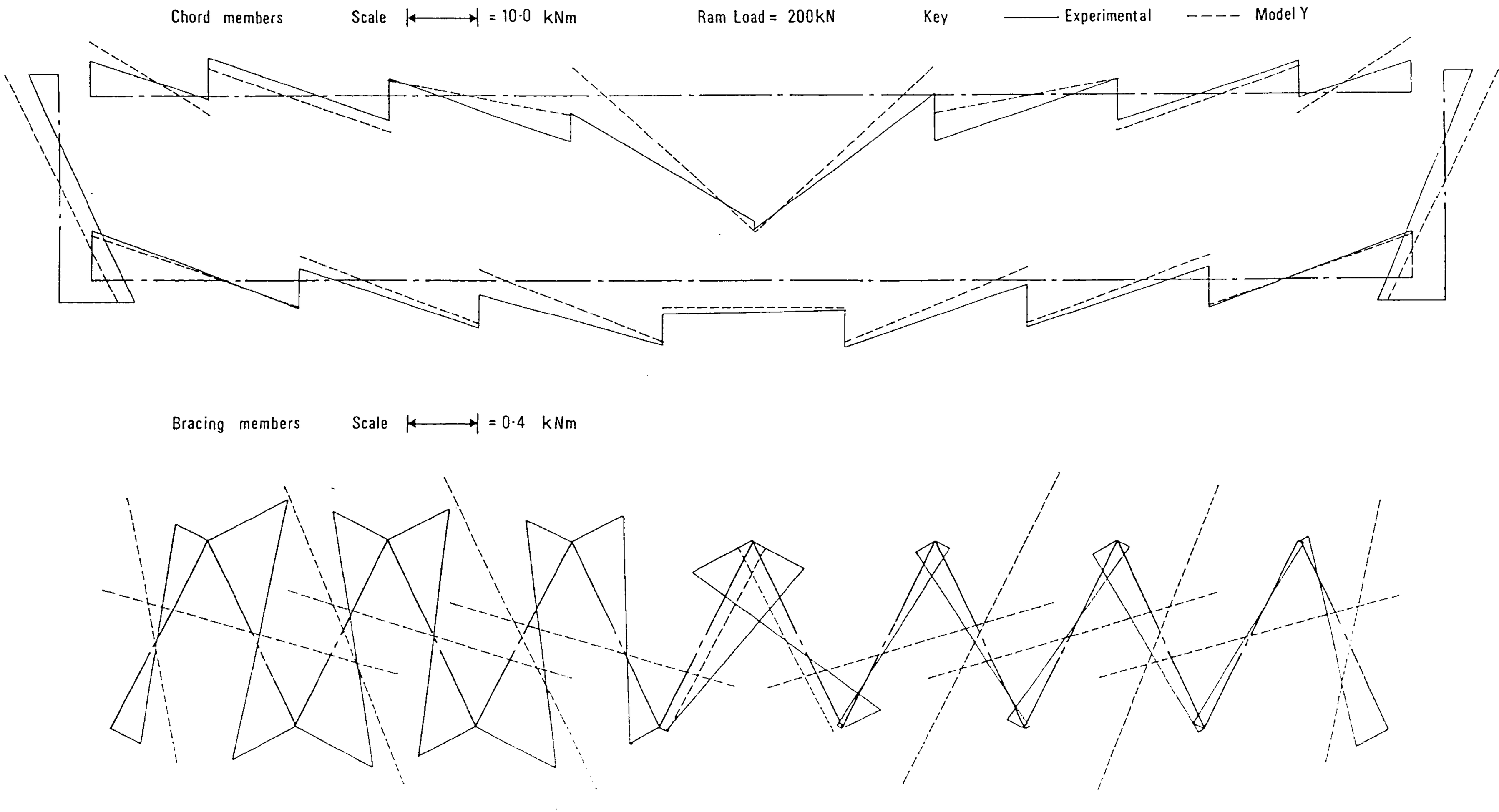

Fig G6(c) Truss T6 : Comparison of experimental and theoretical (model Y) elastic bending moment distributions.

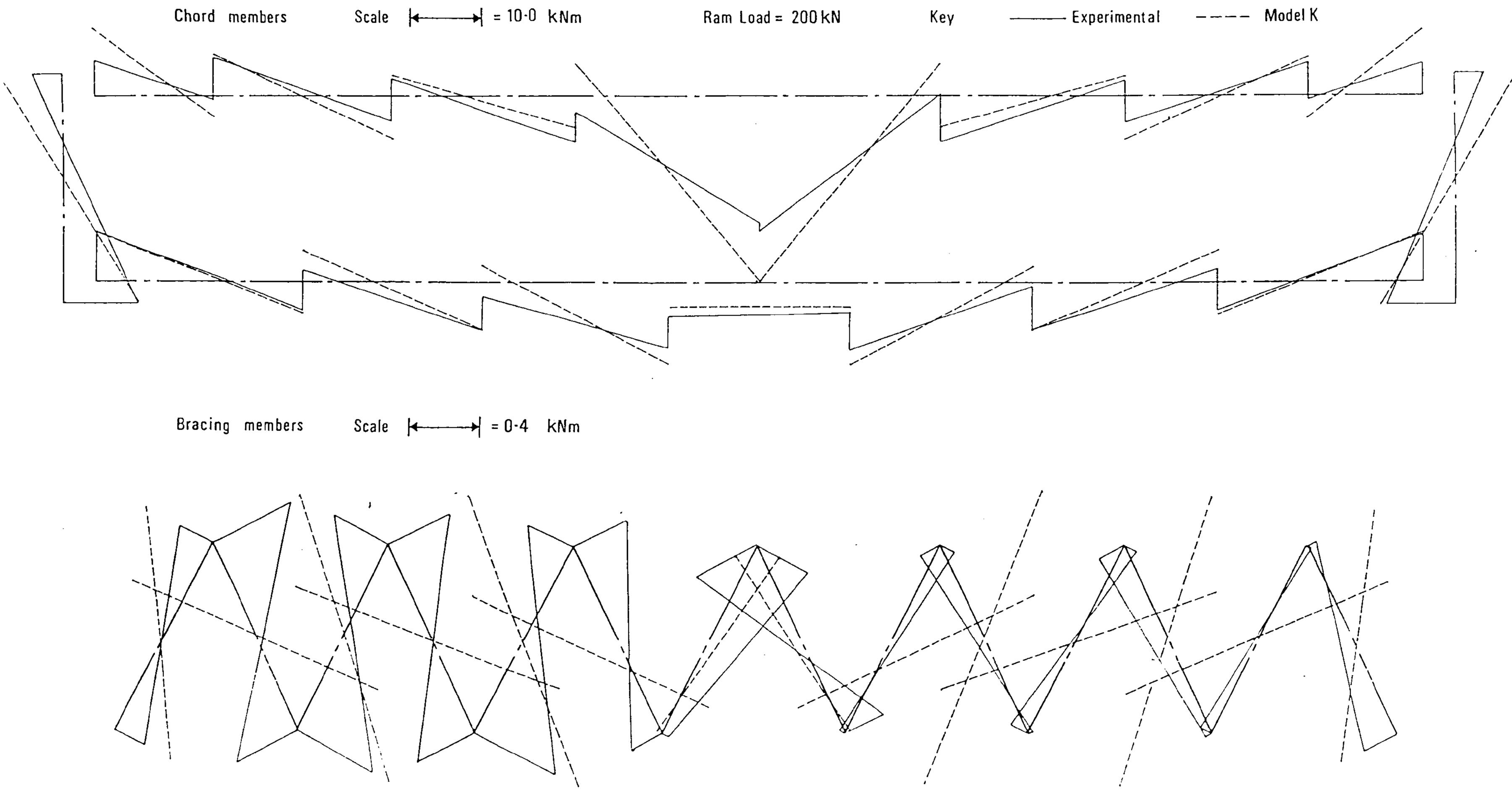

Fig G6(d) Truss T6 : Comparison of experimental and theoretical (model K) elastic bending moment distributions.

APPENDIX H

EXPERIMENTAL BENDING MOMENT DISTRIBUTION DIAGRAMS AT TRUSS ULTIMATE LOAD

(the bending moment diagrams have been plotted on the side of the member where the stress induced by the bending moment is tensile)

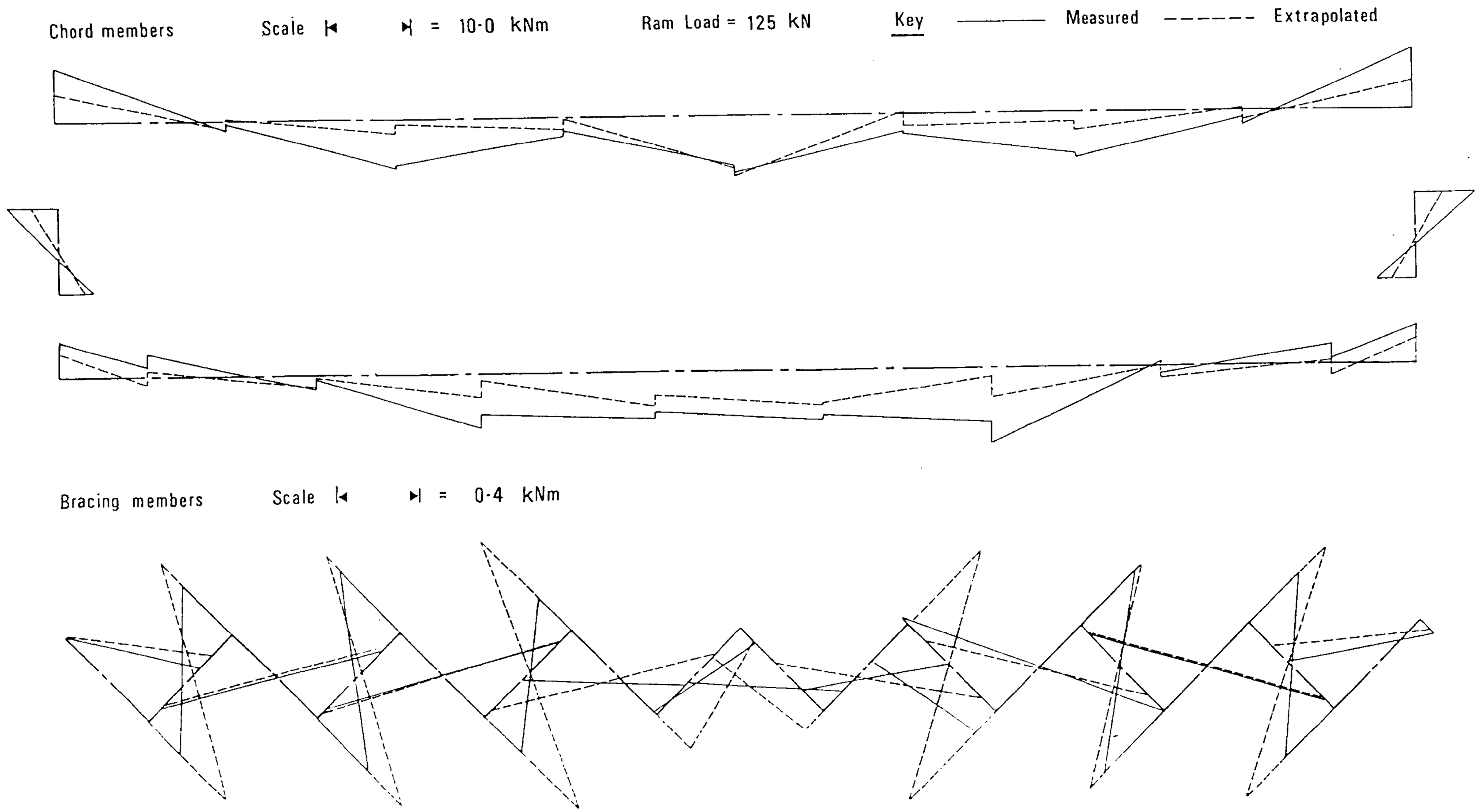

Fig H1 Truss T1 : Comparison of measured bending moment distribution at ultimate load with the experimental elastic distribution extrapolated to the ultimate load.

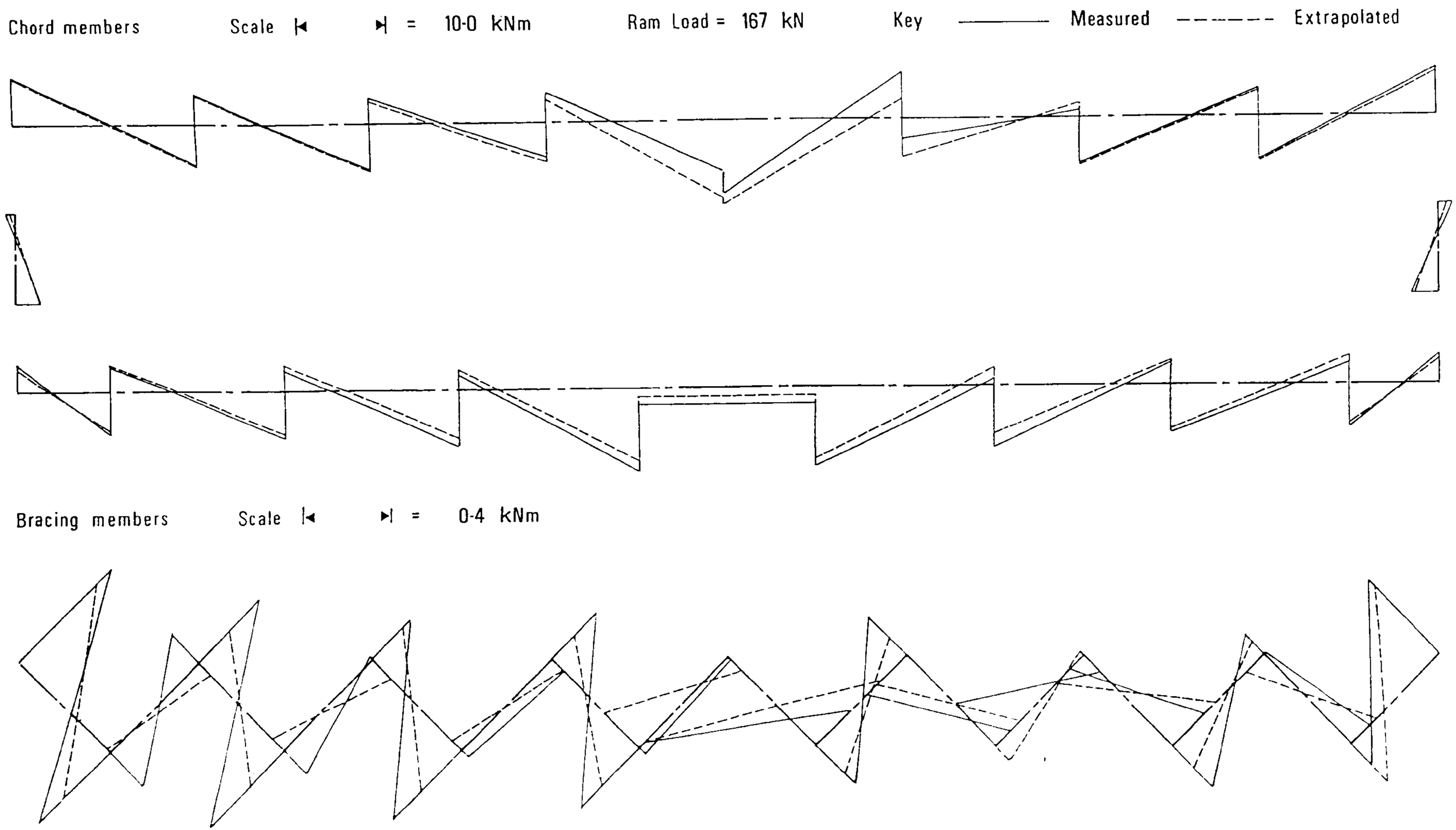

Fig H2 Truss T2 : Comparison of measured bending moment distribution at ultimate load with the experimental elastic distribution extrapolated to the ultimate load.

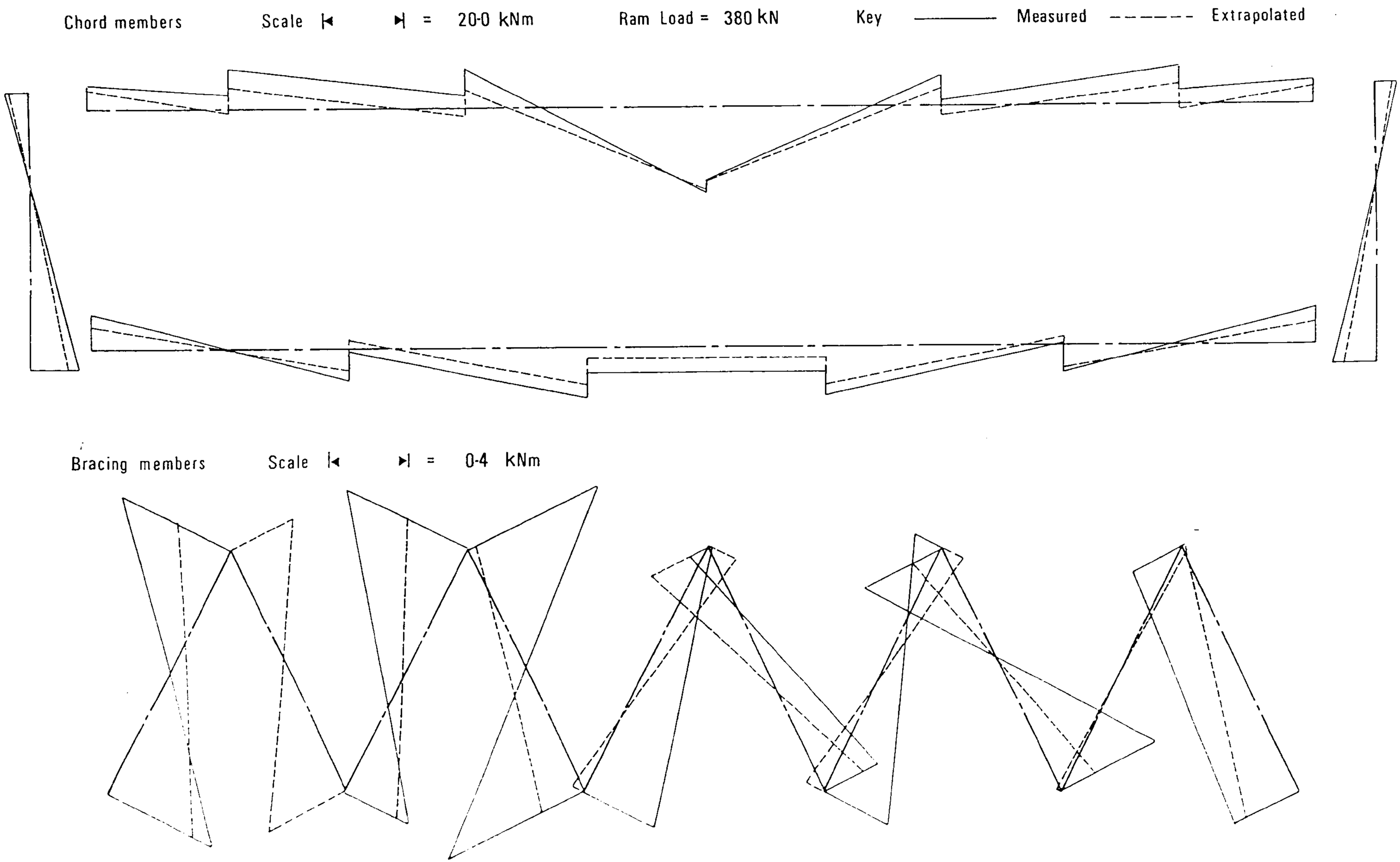

Fig H3 Truss T3 : Comparison of measured bending moment distribution at ultimate load with the experimental elastic distribution extrapolated to the ultimate load.

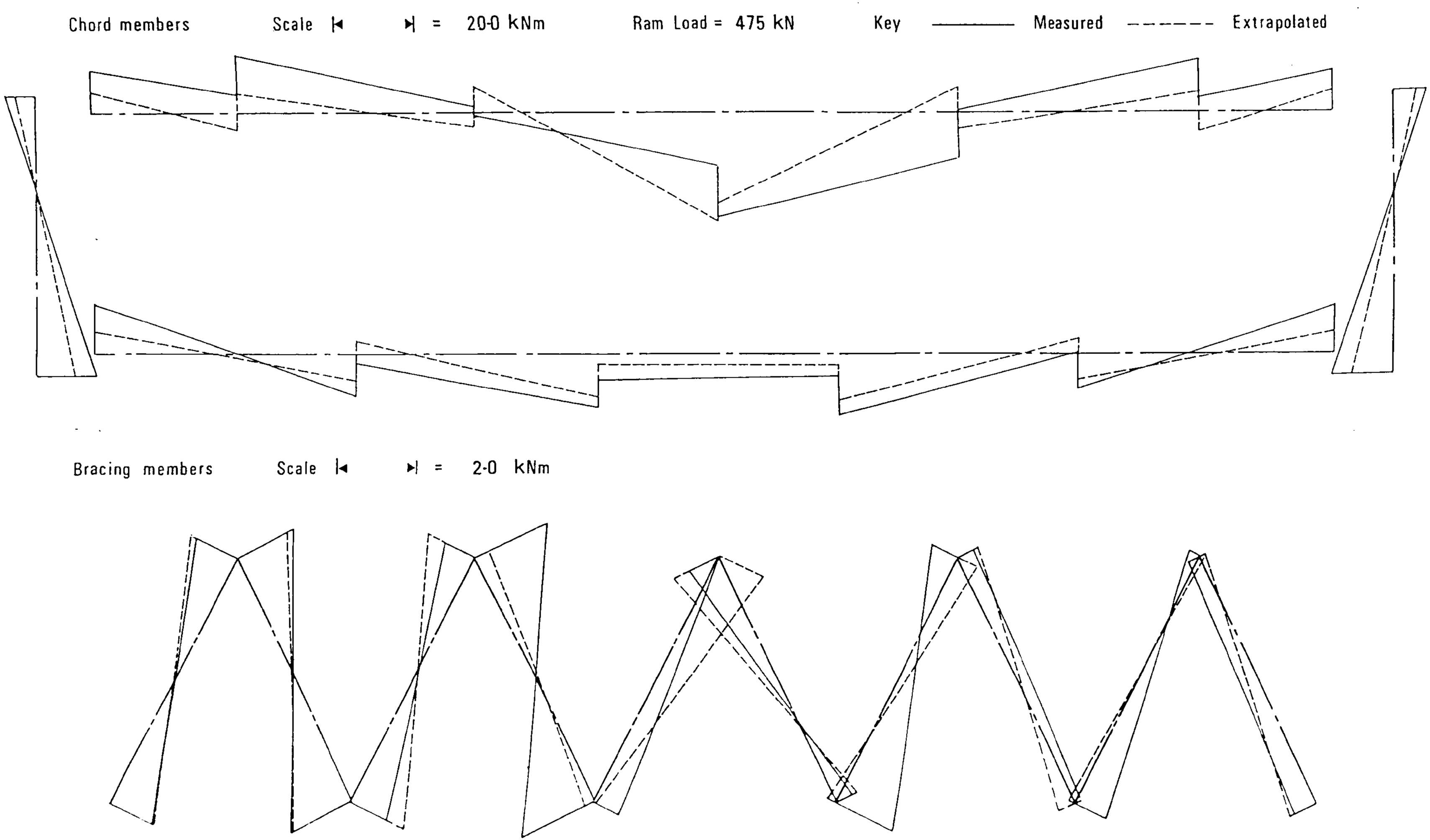

Fig H4 Truss T4 : Comparison of measured bending moment distribution at ultimate load with the experimental elastic distribution extrapolated to the ultimate load.

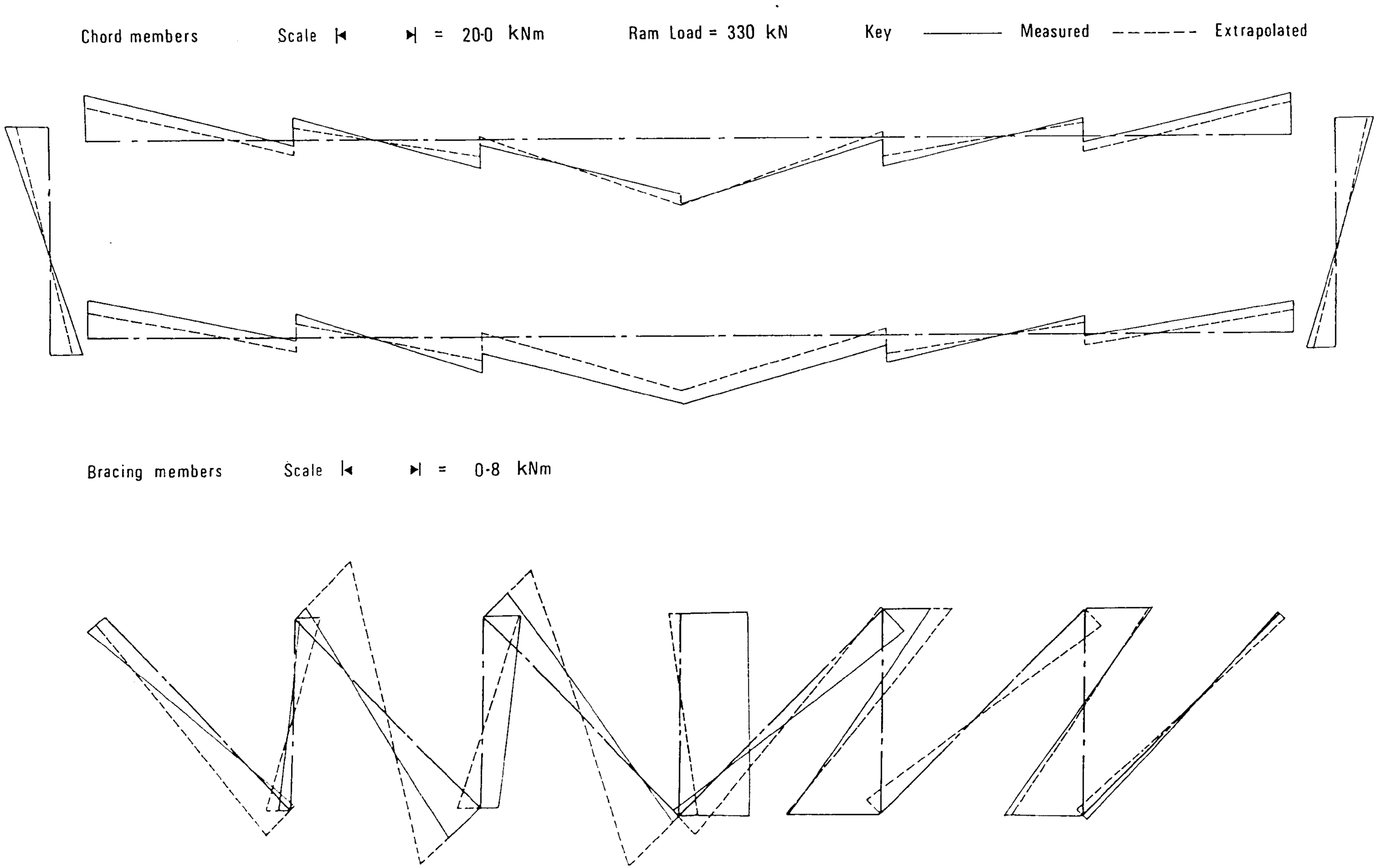

Fig H5 Truss T5 : Comparison of measured bending moment distribution at ultimate load with the experimental elastic distribution extrapolated to the ultimate load.

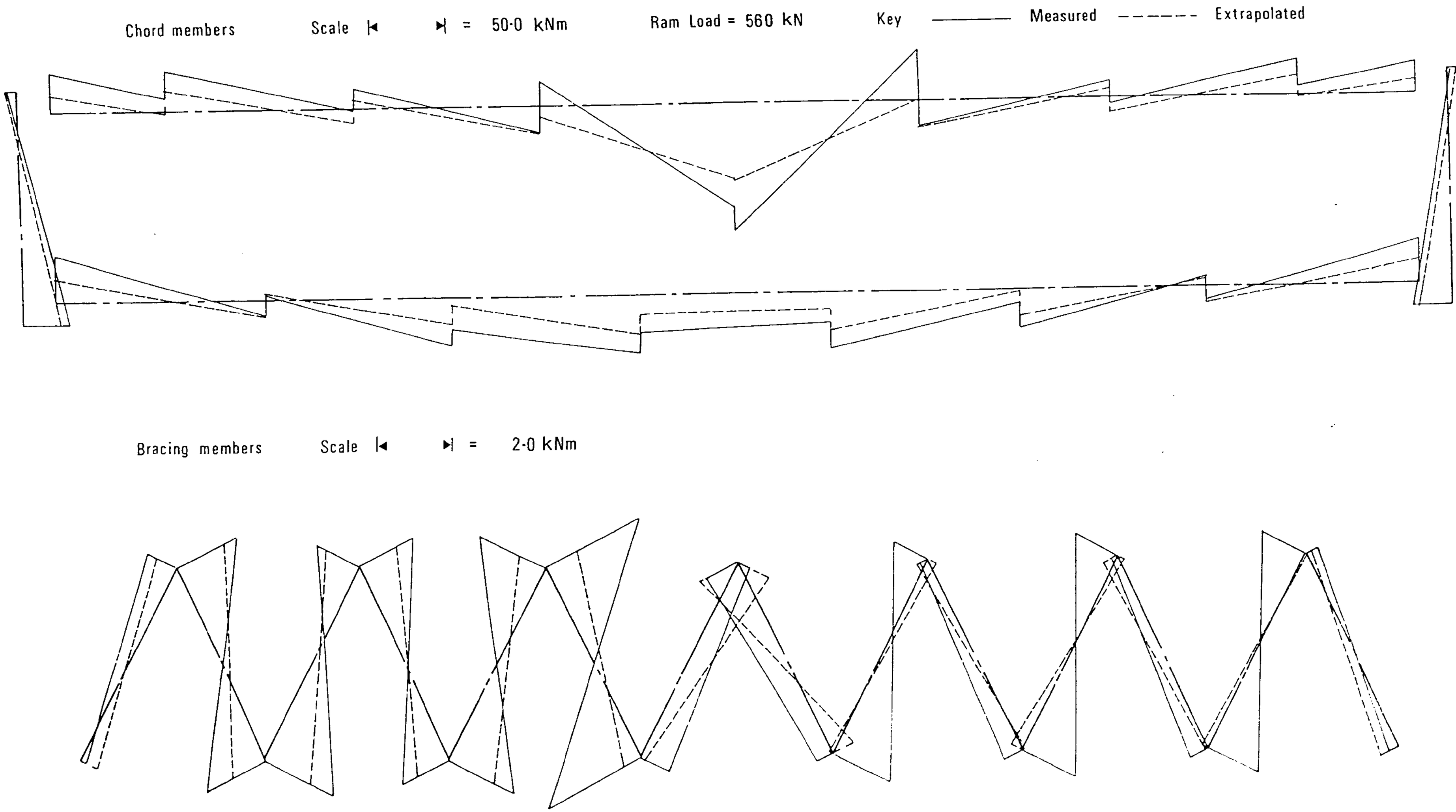

Fig H6 Truss T6 : Comparison of measured bending moment distribution at ultimate load with the experimental elastic distribution extrapolated to the ultimate load.

APPENDIX I

CIDECT DESIGN EQUATIONS FOR RHS GAP AND OVERLAP JOINTS

Table I1 CIDECT implementation of RHS gap joint strength equations.

EQ Nº	FAILURE MODE	ULTIMATE STRENGTH	PARAMETER DEFINITIONS	EXTRA LIMITS
1	Chord face failure	$N_{1m} = \frac{7{\cdot}7\sigma_{e0}\, t_0^2\, \beta (b_0/t_0)^{0{\cdot}5} f(b_0/t_0)\mu}{\sin\theta_1}$ $N_{1k} = 0{\cdot}9 N_{1m}$ $N_{2m} = N_{1m}(\sin\theta_1/\sin\theta_2)$	$\beta = (b_1+h_1+b_2+h_2)/4b_0$ $f(b_0/t_0) = 1+(1{\cdot}25/3000)\left[(b_0/t_0)-30\right](90^\circ-\theta_1-\theta_2)$ " $= 1$ for $b_0/t_0 \leq 30$ " $\not> 1$ $\mu = 1{\cdot}3-(0{\cdot}4/\beta)\left\lvert\sigma_0/\sigma_{e0}\right\rvert$ for comp. chord " $= 1$ for tens. chord	$b_1/t_1 \not> 1{\cdot}1\sqrt{E/\sigma_{e1}}$ $b_2/t_2 \leq 35$ $g/b_0 \geq 0{\cdot}5(1-\beta)$ " $\leq 1{\cdot}5(1-\beta)$
2	Chord shear	$N_q = \left(\sigma_{e0}/\sqrt{3}\right) A_q$	$A_q = 2h_0t_0 + a\, b_0 t_0$; $a = \sqrt{\left(\frac{1}{1+4g^2/3t_0^2}\right)}$	
3	Chord punching shear	$N_{qp} = \frac{\sigma_{eok}\, t_0}{\sqrt{3}\sin\theta_i}\left[(2h_i/\sin\theta_i)+b_i+b_{ep}\right]$	$b_{ep} = \frac{C}{b_0/t_0} \cdot b_i$	$C = 13{\cdot}5$ for Fe 360, Fe 430 $C = 11{\cdot}5$ for Fe 510
4	Bracing effective width	$N_{ei} = \sigma_{ei}\, t_i(2h_i - 4t_i + b_i + b_e)$	$b_e = b_{ep} \cdot \frac{\sigma_{eok}\, t_0}{\sigma_{eik}\, t_i}$	$b_e \not> b_i$; $\sigma_{eok}\, t_0 \geq \sigma_{eik}\, t_i$
5	Combined shear & end load in chord	$N_{fq} = (A_0 - A_q)\sigma_{e0} + A_q\, \sigma_{e0}\sqrt{1-(Q/N_q)^2}$		
6	Combined moment shear and axial load in chord	$(F_0/N_{fq})^{1{\cdot}5} + (M_0/M_{fq}) \not> 1$	$M_{fq} = (A_0 - A_q)(h_0 - t_0)\sigma_{e0} + 0{\cdot}5(h_0 - t_0)\, A_q\, \sigma_{e0}\sqrt{1-(Q/N_q)^2}$	
GENERAL LIMITS	$0{\cdot}4 \leq \beta \leq 1{\cdot}0$; $30 \leq \theta \leq 90$; $\frac{b_0}{t_0}, \frac{h_0}{t_0} \not> 40$; $0{\cdot}5 \leq \frac{h_0}{b_0} \leq 2{\cdot}0$; $\sigma_e \not> 360\ N/mm^2$; $\frac{\sigma_e}{\sigma_u} \not> 0{\cdot}8$			

Table I2 CIDECT implementation of RHS overlap joint strength equations.

GENERAL EQUATION FOR BRACING STRENGTH				PARAMETER DEFINITIONS			
$N_{im} = \sigma_{ei} \cdot t_i \left[(A+B)\, b_i + C h_i - D t_i \right]$; $N_{ik} = N_{im}$				$k_{01} = \sigma_{e0}\, t_0 / \sigma_{e1} t_1$ $k_{02} = \sigma_{e0}\, t_0 / \sigma_{e2} t_2$	$k_{12} = \sigma_{e1}\, t_1 / \sigma_{e2}\, t_2$ $k_{21} = \sigma_{e2}\, t_2 / \sigma_{e1}\, t_1$	$q_1' = q \sin\theta_1 / h_1$ $q_2' = q \sin\theta_2 / h_2$	q is defined in fig 1·2
Eqn Nº	JOINT TYPE	MEMBER	A ● (≯1)	B ● (≯1)	C ● (≯2)	D ● (≯4)	$\gamma_m \gamma_c$
1	Strut O`laps Tie Overlap >80%	Strut	● $12{\cdot}5 (t_2/b_2)\, k_{21}$	1	2	4	1·25 in A
2		Tie	$\sqrt{\sigma_{u2}/\sigma_{e2}}$ (≯1·25)	● $12{\cdot}5 (t_0/b_0) \cdot k_{02} / \sin\theta_2$	A + B	2A + 2B	1·25 in B
3	Tie O`laps Strut Overlap >80%	Strut	1	● $12{\cdot}5 (t_0/b_0) \cdot k_{01} / \sin\theta_1$	2B	2B	1·25 in B
4		Tie	● $12{\cdot}5 (t_1/b_1)\, k_{12}$	1	2	4	1·25 in A
5	Strut O`laps Tie Overlap >25% <80%	Strut	● $12{\cdot}5 (t_2/b_2)\, k_{21}$	● $12{\cdot}5 (t_0/b_0) \cdot k_{01} / \sin\theta_1$	● $B(2 - q_1') + k_{21} q_1'$; $k_{21} \ngtr 1$	● $3B + k_{21}$; $k_{21} \ngtr 1$	1·25 in A&B
6		Tie	1	● $12{\cdot}5 (t_0/b_0) \cdot k_{02} / \sin\theta_2$	1 + B	2 + 2B	1·25 in B
7	Tie O`laps Strut Overlap >25% <80%	Strut	1	● $12{\cdot}5 (t_0/b_0) \cdot k_{01} / \sin\theta_1$	2B	4B	1·25 in B
8		Tie	● $12{\cdot}5 (t_1/b_1)\, k_{12}$	● $12{\cdot}5 (t_0/b_0) \cdot k_{02} / \sin\theta_2$	● $k_{12}(1 + q_2') + B(1 - q_2')$; $k_{12} \ngtr 1$	● $3k_{12} + B$; $k_{12} \ngtr 1$	1·25 in A&B
GENERAL LIMITS	$0{\cdot}25 \le \beta \le 1{\cdot}0$; $30^\circ \le \theta \le 90^\circ$; $b_0/t_0 \ngtr 40$; $b_1/t_1 \ngtr 1{\cdot}24\sqrt{E/\sigma_1}$; $b_2/t_2 \ngtr 35$; $0{\cdot}5 \le h_0/b_0 \le 2{\cdot}0$; $b_1/b_2 \nless 1{\cdot}33$; $\sigma_{e0} \ngtr 360\ N/mm^2$; $\sigma_e/\sigma_u \ngtr 0{\cdot}8$							

APPENDIX J

COMPARISON OF EXPERIMENTAL AND PREDICTED JOINT STRENGTHS

Table J1 Comparison of measured branch member forces at ram failure load with the predicted mean ultimate joint strengths (truss T2).

Ram failure load = 168 kN ; (load cycle =1).

Joint	Member yielding		Measured member forces at ram failure load		Predicted strengths (see notes for interpretation) (CIDECT Eqn. 8.2)		(IIW Eqn. 8.3)		(Haleem Eqn. 8.4)
	Strut	Tie	Strut	Tie	Strut	Tie	Strut	Tie	Strut
	* = yield	* = yield	N_1	N_2	N_{1m}/N_1	N_{2m}/N_2	N_{1m}/N_1	N_{2m}/N_2	$N_{1m}/A_1\sigma_{e1}$
	F = failure	F = failure	kN	kN					
(1)	(2)	(3)	(4)	(5)	(6)	(7)	(8)	(9)	(10)
1			-108	105	2.22	1.71	2.22	1.55	1.00
2			-110	112	1.43	1.43	1.89	1.43	1.00
3			-108	110	1.56	1.48	2.22	1.64	0.98
4			-121	105	1.98	1.71	1.98	1.71	1.00
5			-108	112	2.22	1.43	2.22	1.43	1.00
6			-110	110	1.50	1.48	1.89	1.48	1.00
7			-108	110	1.63	1.38	2.22	1.38	1.00
8			-110	101	2.06	1.78	2.06	1.78	1.00
9			-113	109	1.75	1.47	1.75	1.47	1.00
10			-113	107	2.04	1.52	2.04	1.52	0.98
11			-123	101	1.92	1.78	1.92	1.78	1.00
12		*	-110	109	2.00	1.47	2.00	1.47	1.00
13			-113	107	1.76	1.44	1.76	1.52	1.00
14		*	-113	107	2.01	1.42	2.01	1.42	1.00

Notes :

1) To be read in conjunction with Section 8.9 and Fig S2.
2) For joint properties see Table B9, Appendix B. For modes of failure see Table D3, Appendix D.
3) Columns (2) and (3) indicate by an asterisk, '*' whether extreme fibre yielding has occurred at the strain gauge positions, at the ram failure load.
4) Columns (2) and (3) indicate by an 'F' whether a joint has failed by local yielding in either the tension or compression branch.
5) Columns (4) and (5) indicate the measured axial forces in the branch members, at the ram failure load.
6) Columns (6), (7), (8), & (9) are predicted failure loads expressed as a proportion of the measured forces at the ram failure load.
7) Column (10) is a predicted failure load expressed as a proportion of the strut squash force (ie., yield stress x cross-sectional area).
8) **Joint strength is safely predicted where member yielding and/or member failure, [columns (2) & (3)] coincides with values of less than, or equal to unity in columns (6), (7), (8) & (9).**

Table J2 Comparison of measured branch member forces at ram failure load with the predicted mean ultimate joint strengths (truss T2/2).

Ram failure load = 263 kN ; (load cycle =1).

Joint	Member yielding		Measured member forces at ram failure load		Predicted strengths (see notes for interpretation) (CIDECT Eqn. 8.2)		(IIW Eqn. 8.3)		(Haleem Eqn. 8.4)
	Strut	Tie	Strut	Tie	Strut	Tie	Strut	Tie	Strut
	* = yield	* = yield	N_1	N_2	N_{1m}/N_1	N_{2m}/N_2	N_{1m}/N_1	N_{2m}/N_2	$N_{1m}/A_1\sigma_{e1}$
	F = failure	F = failure	kN	kN					
(1)	(2)	(3)	(4)	(5)	(6)	(7)	(8)	(9)	(10)
1		*	-166	175	1.45	1.03	1.45	0.93	1.00
4		*	-186	175	1.29	1.03	1.29	1.03	1.00
5		*	-166	160	1.45	1.00	1.45	1.00	1.00
8	*		-179	162	1.27	1.11	1.27	1.11	1.00
11	*	*	-198	162	1.19	1.11	1.19	1.11	1.00
12	*		-179	160	1.23	1.00	1.23	1.00	1.00

Notes :

1) To be read in conjunction with Section 8.9 and Fig S2.
2) For joint properties see Table B9, Appendix B. For modes of failure see Table D4, Appendix D.
3) Columns (2) and (3) indicate by an asterisk, '*' whether extreme fibre yielding has occurred at the strain gauge positions, at the ram failure load.
4) Columns (2) and (3) indicate by an 'F' whether a joint has failed by local yielding in either the tension or compression branch.
5) Columns (4) and (5) indicate the measured axial forces in the branch members, at the ram failure load.
6) Columns (6), (7), (8), & (9) are predicted failure loads expressed as a proportion of the measured forces at the ram failure load.
7) Column (10) is a predicted failure load expressed as a proportion of the strut squash force (ie., yield stress x cross-sectional area).
8) **Joint strength is safely predicted where member yielding and/or member failure, [columns (2) & (3)] coincides with values of less than, or equal to unity in columns (6), (7), (8) & (9).**

Table J3 Comparison of measured branch member forces at ram failure load with the predicted mean ultimate joint strengths (truss T3).

Ram failure load = 380 kN ; (load cycle =1).

Joint	Member yielding		Measured member forces at ram failure load		Predicted strengths (see notes for interpretation) (CIDECT Eqn. 8.2)		(IIW Eqn. 8.3)		(Haleem Eqn. 8.4)
	Strut	Tie	Strut	Tie	Strut	Tie	Strut	Tie	Strut
	* = yield	* = yield	N_1	N_2	N_{1m}/N_1	N_{2m}/N_2	N_{1m}/N_1	N_{2m}/N_2	$N_{1m}/A_1\sigma_{e1}$
	F = failure	F = failure	kN	kN					
(1)	(2)	(3)	(4)	(5)	(6)	(7)	(8)	(9)	(10)
1			-184	144	1.10	1.33	1.27	1.33	1.00
2		*	-172	192	1.17	1.00	1.36	1.00	1.00
3			-169	144	1.20	1.33	1.38	1.33	1.00
4		*	-184	192	1.10	1.00	1.27	1.00	1.00
5			-184	150	1.23	1.28	1.23	1.28	1.00
6		*	-175	192	1.29	1.00	1.29	1.00	1.00
7			-177	150	1.28	1.28	1.28	1.28	1.00
8		*	-184	192	1.23	1.00	1.23	1.00	1.00

Notes :

1) To be read in conjunction with Section 8.9 and Fig S2.
2) For joint properties see Table B10, Appendix B. For modes of failure see Table D5, Appendix D.
3) Columns (2) and (3) indicate by an asterisk, '*' whether extreme fibre yielding has occurred at the strain gauge positions, at the ram failure load.
4) Columns (2) and (3) indicate by an 'F' whether a joint has failed by local yielding in either the tension or compression branch.
5) Columns (4) and (5) indicate the measured axial forces in the branch members, at the ram failure load.
6) Columns (6), (7), (8), & (9) are predicted failure loads expressed as a proportion of the measured forces at the ram failure load.
7) Column (10) is a predicted failure load expressed as a proportion of the strut squash force (ie., yield stress x cross-sectional area).
8) **Joint strength is safely predicted where member yielding and/or member failure, [columns (2) & (3)] coincides with values of less than, or equal to unity in columns (6), (7), (8) & (9).**

Table J4 Comparison of measured branch member forces at ram failure load with the predicted mean ultimate joint strengths (truss T4).

Ram failure load = 475 kN ; (load cycle =1).

Joint	Member yielding		Measured member forces at ram failure load		Predicted strengths (see notes below for interpretation) (CIDECT Eqn. 8.2)		(IIW Eqn. 8.3)		(Haleem Eqn. 8.4)
	Strut	Tie	Strut	Tie	Strut	Tie	Strut	Tie	Strut
	* = yield	* = yield	N_1	N_2	N_{1m}/N_1	N_{2m}/N_2	N_{1m}/N_1	N_{2m}/N_2	$N_{1m}/A_1\sigma_{e1}$
	F = failure	F = failure	kN	kN					
(1)	(2)	(3)	(4)	(5)	(6)	(7)	(8)	(9)	(10)
1	*	*	-211	182	1.13	1.24	1.13	1.24	0.96
2	*	*	-202	193	1.18	1.17	1.18	1.17	0.96
3	*	*	-226	182	1.06	1.00	1.06	1.24	0.96
4	*	*	-211	193	1.13	1.07	1.13	1.17	0.96
5	*		-218	190	1.03	1.10	1.03	1.26	0.96
6	*	*	-212	221	1.06	1.13	1.06	1.08	0.96
7	*	*	-222	190	1.01	1.08	1.01	1.26	0.96
8	*	*	-218	221	1.03	1.10	1.03	1.08	0.96

Notes :

1) To be read in conjunction with Section 8.9 and Fig S2.
2) For joint properties see Table B11, Appendix B. For modes of failure see Table D6, Appendix D.
3) Columns (2) and (3) indicate by an asterisk, '*' whether extreme fibre yielding has occurred at the strain gauge positions, at the ram failure load.
4) Columns (2) and (3) indicate by an 'F' whether a joint has failed by local yielding in either the tension or compression branch.
5) Columns (4) and (5) indicate the measured axial forces in the branch members, at the ram failure load.
6) Columns (6), (7), (8), & (9) are predicted failure loads expressed as a proportion of the measured forces at the ram failure load.
7) Column (10) is a predicted failure load expressed as a proportion of the strut squash force (ie., yield stress x cross-sectional area).
8) **Joint strength is safely predicted where member yielding and/or member failure, [columns (2) & (3)] coincides with values of less than, or equal to unity in columns (6), (7), (8) & (9).**

Table J5 Comparison of measured branch member forces at ram failure load with the predicted mean ultimate joint strengths (truss T5).

Ram failure load = 330 kN ; (load cycle =1).

Joint	Member yielding		Measured member forces at ram failure load		Predicted strengths (see notes below for interpretation) (CIDECT Eqn. 8.2)		(IIW Eqn. 8.3)		(Haleem Eqn. 8.4)
	Strut	Tie	Strut	Tie	Strut	Tie	Strut	Tie	Strut
	* = yield	* = yield	N_1	N_2	N_{1m}/N_1	N_{2m}/N_2	N_{1m}/N_1	N_{2m}/N_2	$N_{1m}/A_1\sigma_{e1}$
	F = failure	F = failure	kN	kN					
(1)	(2)	(3)	(4)	(5)	(6)	(7)	(8)	(9)	(10)
1		*	-125	200	1.54	1.06	1.87	1.06	0.96
2		* & F	-127	192	1.51	1.10	1.84	1.10	0.96
3		*	-125	192	1.54	1.10	1.87	1.10	0.96
4		*	-127	202	1.51	1.05	1.84	1.05	0.96
5		*	-119	166	1.61	1.16	1.66	1.16	1.00
6		*	-131	192	1.73	1.00	1.73	1.00	0.96
7		*	-119	192	1.61	1.00	1.66	1.00	1.00
8		*	-131	187	1.73	1.03	1.73	1.03	0.96

Notes :

1) To be read in conjunction with Section 8.9 and Fig S2.
2) For joint properties see Table B12, Appendix B. For modes of failure see Table D7, Appendix D.
3) Columns (2) and (3) indicate by an asterisk, '*' whether extreme fibre yielding has occurred at the strain gauge positions, at the ram failure load.
4) Columns (2) and (3) indicate by an 'F' whether a joint has failed by local yielding in either the tension or compression branch.
5) Columns (4) and (5) indicate the measured axial forces in the branch members, at the ram failure load.
6) Columns (6), (7), (8), & (9) are predicted failure loads expressed as a proportion of the measured forces at the ram failure load.
7) Column (10) is a predicted failure load expressed as a proportion of the strut squash force (ie., yield stress x cross-sectional area).
8) **Joint strength is safely predicted where member yielding and/or member failure, [columns (2) & (3)] coincides with values of less than, or equal to unity in columns (6), (7), (8) & (9).**

Table J6 Comparison of measured branch member forces at ram failure load with the predicted mean ultimate joint strengths (truss T6).

Ram failure load = 560 kN ; (load cycle =1).

Joint	Member yielding		Measured member forces at ram failure load		Predicted strengths (see notes below for interpretation) (CIDECT Eqn. 8.2)		(IIW Eqn. 8.3)		(Haleem Eqn. 8.4)
	Strut	Tie	Strut	Tie	Strut	Tie	Strut	Tie	Strut
	* = yield F = failure	* = yield F = failure	N_1 kN	N_2 kN	N_{1m}/N_1	N_{2m}/N_2	N_{1m}/N_1	N_{2m}/N_2	$N_{1m}/A_1\sigma_{e1}$
(1)	(2)	(3)	(4)	(5)	(6)	(7)	(8)	(9)	(10)
1	F	*	-224	207	1.30	1.33	1.30	1.33	1.00
2		* & F	-217	202	1.34	1.37	1.34	1.21	1.00
3	F	*	-209	189	1.39	1.46	1.39	1.29	1.00
4	* & F	*	-257	207	1.13	1.33	1.13	1.33	1.00
5	* & F	*	-224	202	0.93	1.37	1.30	1.21	1.00
6	F		-217	189	1.34	1.46	1.34	1.29	1.00
7	F		-239	201	1.15	1.45	1.15	1.45	1.00
8	F		-220	223	1.25	1.30	1.25	1.30	1.00
9	F		-218	218	1.27	1.33	1.27	1.33	1.00
10	F		-251	201	1.10	1.45	1.10	1.45	1.00
11	F		-239	223	1.15	1.30	1.15	1.30	1.00
12	F		-220	218	1.25	1.33	1.25	1.33	1.00

Notes :

1) To be read in conjunction with Section 8.9 and Fig S2.
2) For joint properties see Table B13, Appendix B. For modes of failure see Table D8, Appendix D.
3) Columns (2) and (3) indicate by an asterisk, '*' whether extreme fibre yielding has occurred at the strain gauge positions, at the ram failure load.
4) Columns (2) and (3) indicate by an 'F' whether a joint has failed by local yielding in either the tension or compression branch.
5) Columns (4) and (5) indicate the measured axial forces in the branch members, at the ram failure load.
6) Columns (6), (7), (8), & (9) are predicted failure loads expressed as a proportion of the measured forces at the ram failure load.
7) Column (10) is a predicted failure load expressed as a proportion of the strut squash force (ie., yield stress x cross-sectional area).
8) **Joint strength is safely predicted where member yielding and/or member failure, [columns (2) & (3)] coincides with values of less than, or equal to unity in columns (6), (7), (8) & (9).**

APPENDIX K

BRANCH MEMBERS : COMPARISON OF EXPERIMENTAL AND DESIGN RAM FAILURE LOADS

Table K1 Comparison of experimental and predicted ram failure loads based on branch member failure (truss T2).

Experimental ram failure load, (R_{exp}) = 168 kN (load cycle = 1).

Branch Member	Predicted ram failure load Method 1 R_{p1} kN	Method 2 R_{p2} kN	Method 3 R_{p3} kN	Yielding (see note 3)	Ratio of Experimental/Predicted R_{exp}/R_{p1}	R_{exp}/R_{p2}	R_{exp}/R_{p3}
18	251	266	206		0.67	0.63	0.82
19	263	277	326		0.64	0.61	0.52
20	253	256	222		0.66	0.66	0.76
21	245	262	283		0.69	0.64	0.59
22	245	250	218		0.69	0.67	0.77
23	379	239	326		0.44	0.70	0.52
24	299	306	245		0.56	0.55	0.69
25	352	367	326		0.48	0.46	0.52
26	334	361	337		0.50	0.47	0.50
27	300	306	245		0.56	0.55	0.69
28	348	351	318		0.48	0.48	0.53
29	254	250	218	*	0.66	0.67	0.77
30	299	316	283		0.56	0.53	0.59
31	256	256	222		0.66	0.66	0.76
32	339	357	337		0.50	0.47	0.50
33	251	266	206	*	0.67	0.63	0.82

Notes:

1) To be read in conjunction with Fig S1.
2) For description of Methods 1, 2, and 3 see Section 8.10.
3) For each branch the experimental strain gauge values, at ram failure load, have been extrapolated to determine whether the measured yield stress was exceeded at the ends of the member. An asterisk '*' has been used to indicated the members where the measured yield stress was exceeded at one or both ends.
4) **Branch member failure is safely predicted where yielding '*' coincides with values of R_{exp}/R_p which are greater than, or equal to unity.**

Table K2 Comparison of experimental and predicted ram failure loads based on branch member failure (truss T3).

Experimental ram failure load, (R_{exp}) = 380 kN (load cycle = 1).

Branch Member	Predicted ram failure load Method 1 Rp_1 kN	Method 2 Rp_2 kN	Method 3 Rp_3 kN	Yielding (see note 3)	Ratio of Experimental/Predicted R_{exp}/Rp_1	R_{exp}/Rp_2	R_{exp}/Rp_3
12	463	493	419		0.82	0.77	0.91
13	409	400	343	*	0.93	0.95	1.11
14	433	425	419		0.88	0.89	0.91
15	508	552	343		0.75	0.69	1.11
16	465	494	419		0.82	0.77	0.91
17	455	553	419		0.84	0.69	0.91
18	495	552	343		0.77	0.69	1.11
19	490	476	419		0.78	0.80	0.91
20	403	393	343	*	0.94	0.97	1.11
21	526	551	419		0.72	0.69	0.91

Notes:

1) To be read in conjunction with Fig S1.
2) For description of Methods 1, 2, and 3 see Section 8.10.
3) For each branch the experimental strain gauge values, at ram failure load, have been extrapolated to determine whether the measured yield stress was exceeded at the ends of the member. An asterisk '*' has been used to indicated the members where the measured yield stress was exceeded at one or both ends.
4) **Branch member failure is safely predicted where yielding '*' coincides with values of R_{exp}/R_p which are greater than, or equal to unity.**

Table K3 Comparison of experimental and predicted ram failure loads based on branch member failure (truss T4).

Experimental ram failure load, (R_{exp}) = 475 kN (load cycle = 1).

Branch Member	Predicted ram failure load Method 1 R_{p1} kN	Method 2 R_{p2} kN	Method 3 R_{p3} kN	Yielding (see note 3)	Ratio of Experimental/Predicted R_{exp}/R_{p1}	R_{exp}/R_{p2}	R_{exp}/R_{p3}
12	544	572	427	*	0.87	0.83	1.11
13	481	459	427	*	0.99	1.03	1.11
14	506	510	427	*	0.94	0.93	1.11
15	608	622	427	*	0.78	0.76	1.11
16	540	564	427	*	0.88	0.84	1.11
17	493	531	427	*	0.96	0.90	1.11
18	604	660	427	*	0.79	0.72	1.11
19	495	480	427	*	0.96	0.99	1.11
20	505	488	427	*	0.94	0.97	1.11
21	526	538	427	*	0.90	0.88	1.11

Notes:

1) To be read in conjunction with Fig S1.
2) For description of Methods 1, 2, and 3 see Section 8.10.
3) For each branch the experimental strain gauge values, at ram failure load, have been extrapolated to determine whether the measured yield stress was exceeded at the ends of the member. An asterisk '*' has been used to indicated the members where the measured yield stress was exceeded at one or both ends.
4) **Branch member failure is safely predicted where yielding '*' coincides with values of R_{exp}/R_p which are greater than, or equal to unity.**

Table K4 Comparison of experimental and predicted ram failure loads based on branch member failure (truss T5).

Experimental ram failure load, (R_{exp}) = 330 kN (load cycle = 1).

Branch Member	Predicted ram failure load Method 1 R_{p1} kN	Method 2 R_{p2} kN	Method 3 R_{p3} kN	Yielding (see note 3)	Ratio of Experimental/Predicted R_{exp}/R_{p1}	R_{exp}/R_{p2}	R_{exp}/R_{p3}
13	353	387	300	*	0.93	0.85	1.10
14	465	496	469		0.71	0.67	0.70
15	332	349	300	*	0.99	0.94	1.10
16	471	482	469		0.70	0.68	0.70
17	419	498	300	*	0.79	0.66	1.10
19	406	452	271	*	0.81	0.73	1.22
20	439	482	384		0.75	0.68	0.86
21	301	311	271	*	1.10	1.06	1.22
22	562	569	469		0.59	0.58	0.70
23	340	354	271	*	0.97	0.93	1.22

Notes:

1) To be read in conjunction with Fig S1.
2) For description of Methods 1, 2, and 3 see Section 8.10.
3) For each branch the experimental strain gauge values, at ram failure load, have been extrapolated to determine whether the measured yield stress was exceeded at the ends of the member. An asterisk '*' has been used to indicated the members where the measured yield stress was exceeded at one or both ends.
4) **Branch member failure is safely predicted where yielding '*' coincides with values of R_{exp}/R_p which are greater than, or equal to unity.**

Table K5 Comparison of experimental and predicted ram failure loads based on branch member failure (truss T6).

Experimental ram failure load, (R_{exp}) = 560 kN (load cycle = 1).

Branch Member	Predicted ram failure load Method 1 R_{p1} kN	Method 2 R_{p2} kN	Method 3 R_{p3} kN	Yielding (see note 3)	Ratio of Experimental/Predicted R_{exp}/R_{p1}	R_{exp}/R_{p2}	R_{exp}/R_{p3}
16	752	843	520	*	0.74	0.66	1.08
17	621	591	446	*	0.90	0.95	1.26
18	674	711	520	*	0.83	0.79	1.08
19	595	552	446	*	0.94	1.01	1.26
20	703	667	520	*	0.80	0.84	1.08
21	824	1140	520	*	0.68	0.49	1.08
22	715	898	520	*	0.78	0.62	1.08
23	688	852	520	*	0.81	0.66	1.08
24	858	1202	520	*	0.65	0.47	1.08
25	665	633	520	*	0.84	0.88	1.08
26	700	658	520	*	0.80	0.85	1.08
27	667	675	520	*	0.84	0.83	1.08
28	703	705	520	*	0.80	0.79	1.08
29	701	800	520	*	0.80	0.70	1.08

Notes:

1) To be read in conjunction with Fig S1.
2) For description of Methods 1, 2, and 3 see Section 8.10.
3) For each branch the experimental strain gauge values, at ram failure load, have been extrapolated to determine whether the measured yield stress was exceeded at the ends of the member. An asterisk '*' has been used to indicated the members where the measured yield stress was exceeded at one or both ends.
4) **Branch member failure is safely predicted where yielding '*' coincides with values of R_{exp}/R_p which are greater than, or equal to unity.**

APPENDIX L

CHORD MEMBERS : COMPARISON OF EXPERIMENTAL AND DESIGN RAM FAILURE LOADS

Table L1 Comparison of experimental ram failure load with the predicted ram failure loads based on chord member failure (truss T2).

Experimental ram failure load, (R_{exp}) = 168 kN (load cycle = 1).

Chord member	Predicted ram failure load Rp kN	Yielding (see note 3)	Ratio of Experimental/Predicted R_{exp}/Rp
1	517		0.32
2	281		0.60
3	208		0.81
4	179		0.94
5	201		0.84
6	179		0.94
7	208		0.81
8	281		0.60
9	517		0.32
10	372		0.45
11	202		0.83
12	177		0.95
13	161	*	1.04
14	161	*	1.04
15	165	*	1.02
16	189		0.89
17	348		0.48
34	388		0.43
35	388		0.43

Notes:

1) To be read in conjunction with Fig S1.
2) For description of method for calculating the predicted ram failure load see Section 8.10.
3) For each chord member the experimental strain gauge values, at ram failure load, have been extrapolated to determine whether the measured yield stress was exceeded at the ends of the member. An asterisk '*' has been used to indicated the members where the measured yield stress was exceeded at one or both ends.
4) **Chord member failure is safely predicted where yielding '*' coincides with values of R_{exp}/R_p which are greater than, or equal to unity.**

Table L2 Comparison of experimental ram failure load with the predicted ram failure loads based on chord member failure (truss T3).

Experimental ram failure load, (R_{exp}) = 380 kN (load cycle = 1).

Chord member	Predicted ram failure load Rp kN	Yielding (see note 3)	Ratio of Experimental/Predicted R_{exp}/Rp
1	869		0.44
2	435		0.87
3	528		0.72
4	435		0.87
5	869		0.44
6	891		0.43
7	860		0.44
8	274	*	1.39
9	274	*	1.39
10	860		0.44
11	891		0.43
22	765		0.50
23	765		0.50

Notes:

1) To be read in conjunction with Fig S1.
2) For description of method for calculating the predicted ram failure load see Section 8.10.
3) For each chord member the experimental strain gauge values, at ram failure load, have been extrapolated to determine whether the measured yield stress was exceeded at the ends of the member. An asterisk '*' has been used to indicated the members where the measured yield stress was exceeded at one or both ends.
4) **Chord member failure is safely predicted where yielding '*' coincides with values of R_{exp}/R_p which are greater than, or equal to unity.**

Table L3 Comparison of experimental ram failure load with the predicted ram failure loads based on chord member failure (truss T4).

Experimental ram failure load, (R_{exp}) = 475 kN (load cycle = 1).

Chord member	Predicted ram failure load Rp kN	Yielding (see note 3)	Ratio of Experimental/Predicted R_{exp}/Rp
1	950		0.50
2	448	*	1.06
3	546		0.87
4	448	*	1.06
5	950		0.50
6	1054		0.45
7	868		0.55
8	293	*	1.62
9	293	*	1.62
10	868		0.55
11	1054		0.45
22	935		0.51
23	935		0.51

Notes:

1) To be read in conjunction with Fig S1.
2) For description of method for calculating the predicted ram failure load see Section 8.10.
3) For each chord member the experimental strain gauge values, at ram failure load, have been extrapolated to determine whether the measured yield stress was exceeded at the ends of the member. An asterisk '*' has been used to indicated the members where the measured yield stress was exceeded at one or both ends.
4) **Chord member failure is safely predicted where yielding '*' coincides with values of R_{exp}/R_p which are greater than, or equal to unity.**

Table L4 Comparison of experimental ram failure load with the predicted ram failure loads based on chord member failure (truss T5).

Experimental ram failure load, (R_{exp}) = 330 kN (load cycle = 1).

Chord member	Predicted ram failure load Rp kN	Yielding (see note 3)	Ratio of Experimental/Predicted R_{exp}/Rp
1	867		0.38
2	677		0.49
3	318	*	1.04
4	319	*	1.03
5	770		0.43
6	850		0.39
7	515		0.64
8	597		0.55
9	239	*	1.38
10	239	*	1.38
11	643		0.51
12	565		0.58
18	936		0.35
24	566		0.58
25	531		0.62

Notes:

1) To be read in conjunction with Fig S1.
2) For description of method for calculating the predicted ram failure load see Section 8.10.
3) For each chord member the experimental strain gauge values, at ram failure load, have been extrapolated to determine whether the measured yield stress was exceeded at the ends of the member. An asterisk '*' has been used to indicated the members where the measured yield stress was exceeded at one or both ends.
4) **Chord member failure is safely predicted where yielding '*' coincides with values of R_{exp}/R_p which are greater than, or equal to unity.**

Table L5 Comparison of experimental ram failure load with the predicted ram failure loads based on chord member failure (truss T6).

Experimental ram failure load, (R_{exp}) = 560 kN (load cycle = 1).

Chord member	Predicted ram failure load Rp kN	Yielding (see note 3)	Ratio of Experimental/Predicted R_{exp}/Rp
1	1347		0.42
2	984		0.57
3	637		0.88
4	717		0.78
5	637		0.88
6	984		0.57
7	1347		0.42
8	1356		0.41
9	1279		0.44
10	1117		0.50
11	396	*	1.41
12	396	*	1.41
13	1117		0.50
14	1279		0.44
15	1356		0.41
30	1259		0.44
31	1259		0.44

Notes:

1) To be read in conjunction with Fig S1.
2) For description of method for calculating the predicted ram failure load see Section 8.10.
3) For each chord member the experimental strain gauge values, at ram failure load, have been extrapolated to determine whether the measured yield stress was exceeded at the ends of the member. An asterisk '*' has been used to indicated the members where the measured yield stress was exceeded at one or both ends.
4) **Chord member failure is safely predicted where yielding '*' coincides with values of R_{exp}/R_p which are greater than, or equal to unity.**

APPENDIX M

COMPARISON OF MEASURED AND ALLOWABLE SHEAR STRESS IN THE BRANCH MEMBERS

Table M1 Comparison of experimental and allowable shear stress in branch member sidewalls at ram failure load (truss T2).

Ram failure load = 168 kN ; (load cycle = 1).

Joint	Shear force	Sidewall lengths		Sidewall thicknesses		Yield Stress	Shear stresses Test	Shear stresses Allow	Ratio
		L_1	L_2	T_1	T_2	σ_e	τ_{test}	τ_{max}	τ_1/τ_{max}
	kN	mm	mm	mm	mm	Nmm^{-2}	Nmm^{-2}	Nmm^{-2}	
1	156	58.7	10.7	4.1	3.3	427	283	247	1.1
2	162	58.7	10.7	3.9	3.2	381	311	220	1.4
3	159	58.7	10.7	4.1	3.3	427	291	247	1.2
4	165	58.7	10.7	4.1	3.3	427	301	247	1.2
5	161	58.7	10.7	4.1	3.2	427	294	247	1.2
6	161	58.7	10.7	3.9	3.3	381	308	220	1.4
7	159	58.7	10.7	4.1	3.2	427	291	247	1.2
8	154	58.7	10.7	3.3	4.0	386	326	223	1.5
9	162	58.7	10.7	3.2	3.9	352	353	203	1.7
10	161	58.7	10.7	3.3	4.1	357	344	206	1.7
11	164	58.7	10.7	3.3	4.1	386	346	223	1.6
12	160	58.7	10.7	3.2	4.0	352	346	203	1.7
13	161	58.7	10.7	3.3	3.9	357	347	206	1.7
14	161	58.7	10.7	3.2	4.1	334	347	193	1.8

Notes :

1) To be read in conjunction with Figs M1, M2 and S2.
2) For joints 1 - 7 the tie overlaps the strut.
3) For joints 8 - 14 the strut overlaps the tie.
4) For all calculations it has been assumed that the horizontal shear force ($N_1 \cos \theta_1 + N_2 \cos \theta_2$) at an overlapped joint is transferred to the chord face via the sidewalls ($L_1 + L_2$), see Fig M1.
5) The calculated shear stress at ram failure load (τ_{test}) has been evaluated along Section A-A, directly above the line of the weld (taken as 5mm above the chord face).
6) From the Von-Mises stress field (Fig M2) the direct stress across the shear plane A-A has been assumed to be zero (ie., $\sigma_0 = 0$), this corresponds to a maximum allowable shear stress (τ_{max}) of $\sigma_e/\sqrt{3}$.
7) The permissible shear stress according to BS 5950, Part 1 (clause 4.2.3) is based on the assumption that $\sigma_0 = 0$; $\tau_{max} = \sigma_e/\sqrt{3}$.

Table M2 Comparison of experimental and allowable shear stress in branch member sidewalls at ram failure load (truss T2/2).

Ram failure load = 263 kN ; (load cycle = 1).

Joint	Shear force	Sidewall lengths		Sidewall thicknesses		Yield Stress	Shear stresses Test	Shear stresses Allow	Ratio
		L_1	L_2	T_1	T_2	σ_e	τ_{test}	τ_{max}	τ_1/τ_{max}
	kN	mm	mm	mm	mm	Nmm^{-2}	Nmm^{-2}	Nmm^{-2}	
1	249	58.7	10.7	4.1	3.3	427	454	247	1.8
4	264	58.7	10.7	4.1	3.3	427	480	247	1.9
5	238	58.7	10.7	4.1	3.2	427	435	247	1.8
8	249	58.7	10.7	3.3	4.0	386	528	223	2.4
11	263	58.7	10.7	3.3	4.1	386	555	223	2.5
12	248	58.7	10.7	3.2	4.0	352	535	203	2.6

Notes :

1) To be read in conjunction with Figs M1, M2 and S2.
2) For joints 1, 4, 5 the tie overlaps the strut.
3) For joints 8, 11, 12 the strut overlaps the tie.
4) For all calculations it has been assumed that the horizontal shear force ($N_1 \cos \theta_1 + N_2 \cos \theta_2$) at an overlapped joint is transferred to the chord face via the sidewalls ($L_1 + L_2$), see Fig M1.
5) The calculated shear stress at ram failure load (τ_{test}) has been evaluated along Section A-A, directly above the line of the weld (taken as 5mm above the chord face).
6) From the Von-Mises stress field (Fig M2) the direct stress across the shear plane A-A has been assumed to be zero (ie., $\sigma_0 = 0$), this corresponds to a maximum allowable shear stress (τ_{max}) of $\sigma_e/\sqrt{3}$.
7) The permissible shear stress according to BS 5950, Part 1 (clause 4.2.3) is based on the assumption that $\sigma_0 = 0$; $\tau_{max} = \sigma_e/\sqrt{3}$.

Table M3 Comparison of experimental and allowable shear stress in branch member sidewalls at ram failure load (truss T3).

Ram failure load = 380 kN ; (load cycle = 1).

Joint	Shear force	Sidewall lengths		Sidewall thicknesses		Yield Stress	Shear stresses Test	Shear stresses Allow	Ratio
		L_1	L_2	T_1	T_2	σ_e	τ_{test}	τ_{max}	τ_1/τ_{max}
	kN	mm	mm	mm	mm	Nmm^{-2}	Nmm^{-2}	Nmm^{-2}	
1	147	44.7	5.0	4.0	3.0	426	385	246	1.6
2	164	44.7	5.0	4.0	3.0	426	427	246	1.7
3	141	44.7	5.0	4.0	3.0	426	367	246	1.5
4	169	44.7	5.0	4.0	3.0	426	441	246	1.8
5	150	44.7	5.0	3.0	4.0	447	485	258	1.9
6	165	44.7	5.0	3.0	4.0	447	533	258	2.1
7	147	44.7	5.0	3.0	4.0	447	475	258	1.8
8	169	44.7	5.0	3.0	4.0	447	546	258	2.1

Notes :

1) To be read in conjunction with Figs M1, M2 and S2.
2) For joints 1 - 4 the tie overlaps the strut.
3) For joints 5 - 8 the strut overlaps the tie.
4) For all calculations it has been assumed that the horizontal shear force ($N_1 \cos \theta_1 + N_2 \cos \theta_2$) at an overlapped joint is transferred to the chord face via the sidewalls ($L_1 + L_2$), see Fig M1.
5) The calculated shear stress at ram failure load (τ_{test}) has been evaluated along Section A-A, directly above the line of the weld (taken as 5mm above the chord face).
6) From the Von-Mises stress field (Fig M2) the direct stress across the shear plane A-A has been assumed to be zero (ie., $\sigma_0 = 0$), this corresponds to a maximum allowable shear stress (τ_{max}) of $\sigma_e/\sqrt{3}$.
7) The permissible shear stress according to BS 5950, Part 1 (clause 4.2.3) is based on the assumption that $\sigma_0 = 0$; $\tau_{max} = \sigma_e/\sqrt{3}$.

Table M4 Comparison of experimental and allowable shear stress in branch member sidewalls at ram failure load (truss T4).

Ram failure load = 475 kN ; (load cycle = 1).

Joint	Shear force	Sidewall lengths		Sidewall thicknesses		Yield Stress	Shear stresses Test	Shear stresses Allow	Ratio
		L_1	L_2	T_1	T_2	σ_e	τ_{test}	τ_{max}	τ_1/τ_{max}
	kN	mm	mm	mm	mm	Nmm^{-2}	Nmm^{-2}	Nmm^{-2}	
1	177	67.2	5.0	3.2	3.2	345	387	199	1.9
2	178	67.2	5.0	3.2	3.2	345	389	199	2.0
3	183	67.2	5.0	3.2	3.2	345	402	199	2.0
4	182	67.2	5.0	3.2	3.2	345	398	199	2.0
5	183	67.2	5.0	3.2	3.2	345	402	199	2.0
6	194	67.2	5.0	3.2	3.2	345	425	199	2.1
7	185	67.2	5.0	3.2	3.2	345	406	199	2.0
8	197	67.2	5.0	3.2	3.2	345	432	199	2.2

Notes :

1) To be read in conjunction with Figs M1, M2 and S2.
2) For joints 1 - 4 the tie overlaps the strut.
3) For joints 5 - 8 the strut overlaps the tie.
4) For all calculations it has been assumed that the horizontal shear force ($N_1 \cos \theta_1 + N_2 \cos \theta_2$) at an overlapped joint is transferred to the chord face via the sidewalls ($L_1 + L_2$), see Fig M1.
5) The calculated shear stress at ram failure load (τ_{test}) has been evaluated along Section A-A, directly above the line of the weld (taken as 5mm above the chord face).
6) From the Von-Mises stress field (Fig M2) the direct stress across the shear plane A-A has been assumed to be zero (ie., $\sigma_0 = 0$), this corresponds to a maximum allowable shear stress (τ_{max}) of $\sigma_e/\sqrt{3}$.
7) The permissible shear stress according to BS 5950, Part 1 (clause 4.2.3) is based on the assumption that $\sigma_0 = 0$; $\tau_{max} = \sigma_e/\sqrt{3}$.

Table M5 Comparison of experimental and allowable shear stress in branch member sidewalls at ram failure load (truss T5).

Ram failure load = 330 kN ; (load cycle = 1).

Joint	Shear force	Sidewall lengths		Sidewall thicknesses		Yield Stress	Shear stresses Test	Shear stresses Allow	Ratio
		L_1	L_2	T_1	T_2	σ_e	τ_{test}	τ_{max}	τ_1/τ_{max}
	kN	mm	mm	mm	mm	Nmm^{-2}	Nmm^{-2}	Nmm^{-2}	
1	141	40.0	5.0	4.0	3.1	426	408	246	1.7
2	136	40.0	5.0	4.0	3.1	426	391	246	1.6
3	136	40.0	5.0	4.0	3.1	426	391	246	1.6
4	143	40.0	5.0	4.0	3.1	426	412	246	1.7
5	117	56.6	5.0	3.0	3.0	447	316	258	1.2
6	136	56.6	5.0	3.0	4.0	447	356	258	1.4
7	136	56.6	5.0	3.0	3.0	447	365	258	1.4
8	132	56.6	5.0	3.0	4.0	447	347	258	1.3

Notes :

1) To be read in conjunction with Figs M1, M2 and S2.
2) For joints 1 - 4 the tie overlaps the strut.
3) For joints 5 - 8 the strut overlaps the tie.
4) For all calculations it has been assumed that the horizontal shear force ($N_1 \cos \theta_1 + N_2 \cos \theta_2$) at an overlapped joint is transferred to the chord face via the sidewalls ($L_1 + L_2$), see Fig M1.
5) The calculated shear stress at ram failure load (τ_{test}) has been evaluated along Section A-A, directly above the line of the weld (taken as 5mm above the chord face).
6) From the Von-Mises stress field (Fig M2) the direct stress across the shear plane A-A has been assumed to be zero (ie., $\sigma_0 = 0$), this corresponds to a maximum allowable shear stress (τ_{max}) of $\sigma_e/\sqrt{3}$.
7) The permissible shear stress according to BS 5950, Part 1 (clause 4.2.3) is based on the assumption that $\sigma_0 = 0$; $\tau_{max} = \sigma_e/\sqrt{3}$.

Table M6 Comparison of experimental and allowable shear stress in branch member sidewalls at ram failure load (truss T6).

Ram failure load = 560 kN ; (load cycle = 1).

Joint	Shear force	Sidewall lengths		Sidewall thicknesses		Yield Stress	Shear stresses Test	Shear stresses Allow	Ratio
		L_1	L_2	T_1	T_2	σ_e	τ_{test}	τ_{max}	τ_1/τ_{max}
	kN	mm	mm	mm	mm	Nmm^{-2}	Nmm^{-2}	Nmm^{-2}	
1	194	67.2	5.0	3.2	3.2	421	423	243	1.7
2	188	67.2	5.0	3.2	3.1	421	412	243	1.7
3	179	67.2	5.0	3.2	3.1	421	391	243	1.6
4	209	67.2	5.0	3.2	3.2	421	455	243	1.9
5	191	67.2	5.0	3.2	3.1	421	419	243	1.7
6	182	67.2	5.0	3.2	3.1	421	399	243	1.6
7	198	67.2	5.0	3.2	3.2	421	432	243	1.8
8	199	67.2	5.0	3.2	3.2	421	435	243	1.8
9	196	67.2	5.0	3.2	3.2	421	428	243	1.8
10	203	67.2	5.0	3.2	3.2	421	444	243	1.8
11	208	67.2	5.0	3.2	3.2	421	454	243	1.9
12	197	67.2	5.0	3.2	3.2	421	430	243	1.8

Notes :

1) To be read in conjunction with Figs M1, M2 and S2.
2) For joints 1 - 4 the tie overlaps the strut.
3) For joints 5 - 8 the strut overlaps the tie.
4) For all calculations it has been assumed that the horizontal shear force ($N_1 \cos \theta_1 + N_2 \cos \theta_2$) at an overlapped joint is transferred to the chord face via the sidewalls ($L_1 + L_2$), see Fig M1.
5) The calculated shear stress at ram failure load (τ_{test}) has been evaluated along Section A-A, directly above the line of the weld (taken as 5mm above the chord face).
6) From the Von-Mises stress field (Fig M2) the direct stress across the shear plane A-A has been assumed to be zero (ie., $\sigma_0 = 0$), this corresponds to a maximum allowable shear stress (τ_{max}) of $\sigma_e/\sqrt{3}$.
7) The permissible shear stress according to BS 5950, Part 1 (clause 4.2.3) is based on the assumption that $\sigma_0 = 0$; $\tau_{max} = \sigma_e/\sqrt{3}$.

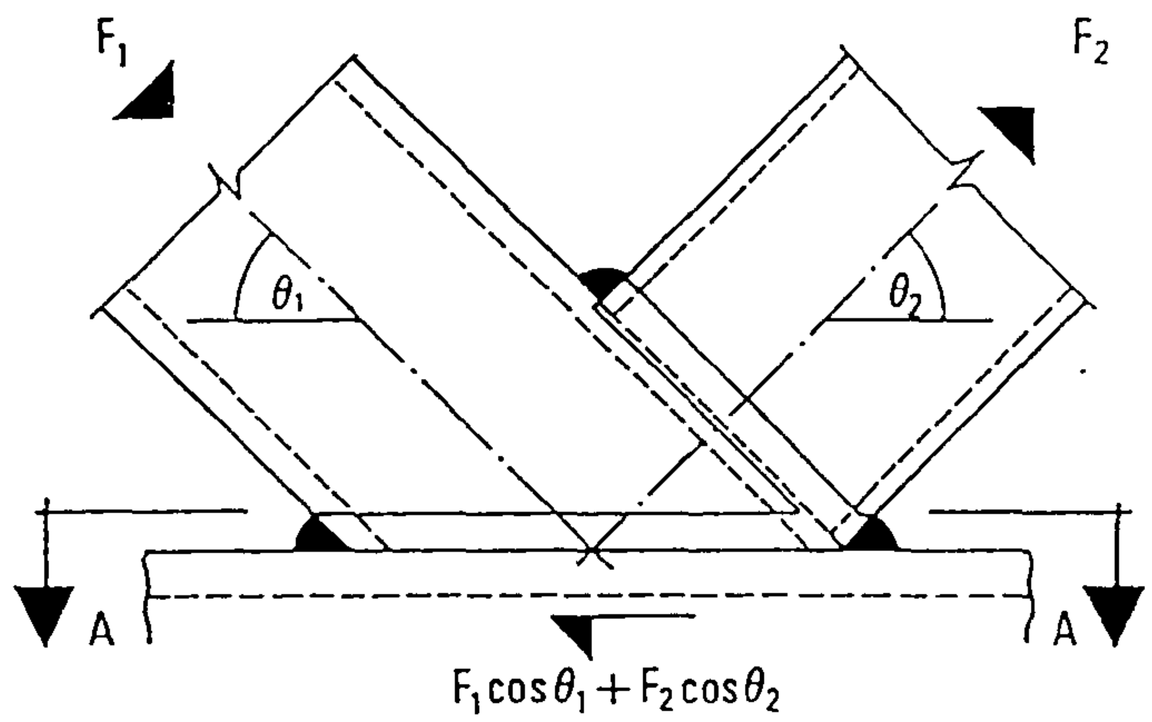

side elevation of 100% overlap joint

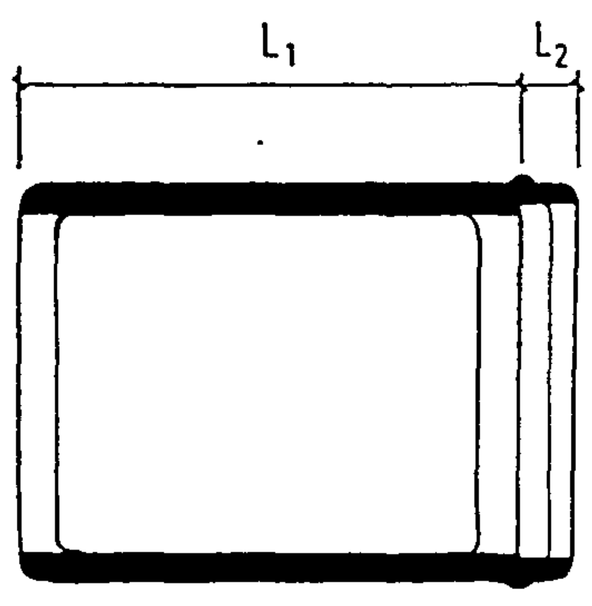

only sidewalls are assumed to be effective in transferring shear according to BS 5950 (clause 4·2·3)

A – A

Fig M1 The transfer of shear force between the branch members and the connecting chord face.

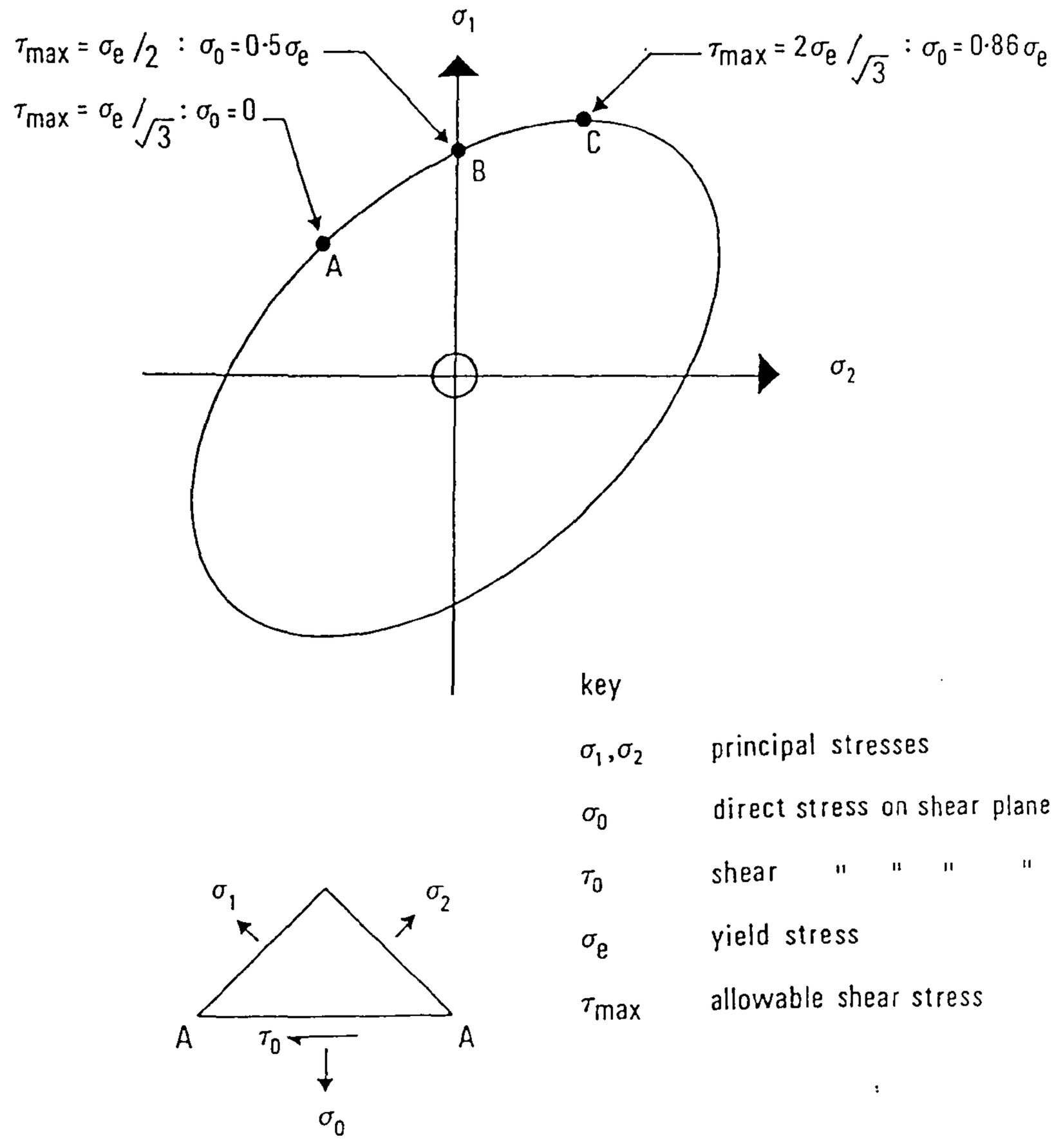

key

σ_1, σ_2	principal stresses
σ_0	direct stress on shear plane A-A
τ_0	shear " " " " "
σ_e	yield stress
τ_{max}	allowable shear stress

Fig M2 Allowable shear stress based on the Von-Mises stress field.